AMX-8952-A, AMX-8952-B, and AMX-8952-C
User Guide

www.rossvideo.com

Thank You for Choosing Ross

You've made a great choice. We expect you will be very happy with your purchase of Ross Technology.

Our mission is to:

1. Provide a Superior Customer Experience
   - offer the best product quality and support
2. Make Cool Practical Technology
   - develop great products that customers love

Ross has become well known for the Ross Video Code of Ethics. It guides our interactions and empowers our employees. I hope you enjoy reading it below.

If anything at all with your Ross experience does not live up to your expectations be sure to reach out to us at *solutions@rossvideo.com*.

David Ross
CEO, Ross Video
dross@rossvideo.com

Ross Video Code of Ethics

Any company is the sum total of the people that make things happen. At Ross, our employees are a special group. Our employees truly care about doing a great job and delivering a high quality customer experience every day. This code of ethics hangs on the wall of all Ross Video locations to guide our behavior:

1. We will always act in our customers' best interest.
2. We will do our best to understand our customers' requirements.
3. We will not ship crap.
4. We will be great to work with.
5. We will do something extra for our customers, as an apology, when something big goes wrong and it's our fault.
6. We will keep our promises.
7. We will treat the competition with respect.
8. We will cooperate with and help other friendly companies.
9. We will go above and beyond in times of crisis. *If there's no one to authorize the required action in times of company or customer crisis - do what you know in your heart is right. (You may rent helicopters if necessary.)*

AMX-8952 Series · User Guide

- Ross Part Number: **8952DR-004-06**
- Revision: 2
- Release Date: September 17, 2024.
- Software Version: 1.2

The information contained in this Guide is subject to change without notice or obligation.

Copyright

©2024 Ross Video Limited, Ross®, and any related marks are trademarks or registered trademarks of Ross Video Limited. All other trademarks are the property of their respective companies. PATENTS ISSUED and PENDING. All rights reserved. No part of this publication may be reproduced, stored in a retrieval system, or transmitted in any form or by any means, mechanical, photocopying, recording or otherwise, without the prior written permission of Ross Video. While every precaution has been taken in the preparation of this document, Ross Video assumes no responsibility for errors or omissions. Neither is any liability assumed for damages resulting from the use of the information contained herein.

Patents

Patent numbers US 7,034,886; US 7,508,455; US 7,602,446; US 7,802,802 B2; US 7,834,886; US 7,914,332; US 8,307,284; US 8,407,374 B2; US 8,499,019 B2; US 8,519,949 B2; US 8,743,292 B2; GB 2,419,119 B; GB 2,447,380 B; and other patents pending.

Notice

The material in this manual is furnished for informational use only. It is subject to change without notice and should not be construed as commitment by Ross Video Limited. Ross Video Limited assumes no responsibility or liability for errors or inaccuracies that may appear in this manual.

Safety Notices

Refer to the "**Important Regulatory and Safety Notices**" document that accompanied your product.

Statement of Compliance

This product has been determined to be compliant with the applicable standards, regulations, and directives for the countries where the product is marketed.

Compliance documentation, such as certification or Declaration of Compliance for the product is available upon request by contacting techsupport@rossvideo.com. Please include the product; model number identifiers and serial number and country that compliance information is needed in request.

EMC Notices

US FCC Part 15

This equipment has been tested and found to comply with the limits for a class A Digital device, pursuant to part 15 of the FCC Rules.

These limits are designed to provide reasonable protection against harmful interference when the equipment is operated in a Commercial environment. This equipment generates, uses, and can radiate radio frequency energy and, if not installed and used in accordance with the instruction manual, may cause harmful interference to radio communications. Operation of this equipment in a residential area is likely to cause harmful interference in which case the user will be required to correct the interference at his own expense.

Notice — *Changes or modifications to this equipment not expressly approved by Ross Video Ltd. could void the user's authority to operate this equipment.*

Canada

This Class "A" digital apparatus complies with Canadian ICES-003 and part 15 of the FCC Rules.

Cet appareil numerique de la classe "A" est conforme a la norme NMB-003 du Canada.

European Union

This equipment is in compliance with the essential requirements and other relevant provisions established under regulation (EC) No 765/2008 and Decision No 768/2008/EC referred to as the "New Legislative Framework".

Warning — *This equipment is compliant with Class A of CISPR 32. In a residential environment this equipment may cause radio interference.*

Australia/New Zealand

This equipment is in compliance with the provisions established under the Radiocommunications Act 1992 and Radiocommunications Labeling (Electromagnetic Compatibility) Notice 2008.

Korea

This equipment is in compliance with the provisions established under the Radio Waves Act.

Class A equipment (Broadcasting and communications service for business use)

This device is a business-use (Class A) EMC-compliant device. The seller and user are advised to be aware of this fact. This device is intended for use in areas outside home.

Type of Equipment	User's Guide
A급 기기 (업무용 방송통신기자재)	이 기기는 업무용(A급) 전자파적합기기로서 판매자 또는 사용자는 이 점을 주의하시기 바라며, 가정외의 지역에서 사용하는 것을 목적으로 합니다.
Class A Equipment (Industrial Broadcasting & Communication Equipment)	This equipment is **Industrial (Class A) electromagnetic wave suitability equipment** and seller or user should take notice of it, and this equipment is to be used in the places except for home.

International

This equipment has been tested under the requirements of CISPR 22:2008 or CISPR 32:2015 and found to comply with the limits for a Class A Digital device.

Notice — *This is a Class A product. In domestic environments, this product may cause radio interference, in which case the user may have to take adequate measures.*

Maintenance/User Serviceable Parts

Routine maintenance to this openGear product is not required. This product contains no user serviceable parts. If the module does not appear to be working properly, please contact Technical Support using the numbers listed under the "**Contact Us**" section of this manual. All openGear products are covered by a generous 5-year warranty and will be repaired without charge for materials or labor within this period. See "**Warranty and Repair Policy**" in this manual for details.

Environmental Information

The equipment may contain hazardous substances that could impact health and the environment.

To avoid the potential release of those substances into the environment and to diminish the need for the extraction of natural resources, Ross Video encourages you to use the appropriate take-back systems. These systems will reuse or recycle most of the materials from your end-of-life equipment in an environmentally friendly and health conscious manner.

The crossed-out wheeled bin symbol invites you to use these systems.

If you need more information on the collection, reuse, and recycling systems, please contact your local or regional waste administration. You can also contact Ross Video for more information on the environmental performances of our products.

Security and Privacy

If you would like more information on how Ross Video security and privacy practices have been applied to the AMX-8952 Series, what you should know about maintaining security of this product, and how we can partner with you to ensure security throughout this product's life-cycle, contact techsupport@rossvideo.com.

Ross Video has implemented reasonable administrative, technical, and physical safeguards to help protect against security incidents and privacy breaches involving a Ross Video product provided those products are used in accordance with Ross Video instructions for use. However, as systems and threats evolve, no system can be protected against all vulnerabilities and we consider our customers the most important partner in maintaining security and privacy safeguards. If you have any concerns, we ask that you bring them to our attention, and we will investigate. Where appropriate, we will address the issue with product changes, technical bulletins and/or responsible

disclosures to customers and regulators. Ross Video continuously strives to improve security and privacy throughout the product life-cycle using practices such as:

- Privacy and Security by Design
- Product and Supplier Risk Assessment
- Vulnerability and Patch Management
- Secure Coding Practices and Analysis
- Vulnerability Scanning
- Access Controls appropriate to Customer Data
- Incident Response
- Clear paths for two-way communication between customers and Ross Video

If you would like to report a potential product related privacy or security issue (incident, breach, or vulnerability), contact techsupport@rossvideo.com.

Company Address

Ross Video Limited
8 John Street
Iroquois, Ontario, K0E 1K0
Canada

Ross Video Incorporated
P.O. Box 880
Ogdensburg, New York
USA 13669-0880

General Business Office:	(+1) 613 • 652 • 4886
Fax:	(+1) 613 • 652 • 4425
Technical Support:	(+1) 613 • 652 • 4886
After Hours Emergency:	(+1) 613 • 349 • 0006
E-mail (Technical Support):	techsupport@rossvideo.com
E-mail (General Information):	solutions@rossvideo.com
Website:	http://www.rossvideo.com

Contents

Introduction 11

Related Publications 11
Documentation Conventions 12
Interface Elements 12
User Entered Text 12
Referenced Guides 12
Menu Sequences 12
Important Instructions 12
Contacting Technical Support 12

Before You Begin 15

AMX-8952-A and AMX-8952-B Overview 15
AMX-8952-C Overview 16
Features 17
User Interfaces 17
DashBoard Control System 17
SNMP Monitoring and Control 17

Hardware Overview 19

Marketing Codes Overview 19
Main PCB Overview 19
RESET Button 19
Monitoring via the Card-edge 20
Supported Rear Modules 21
AMX-8952-A 21
AMX-8952-B 22
AMX-8952-C 23

Physical Installation 25

Before You Begin 25
Removing the Blank Plates from the Rear Panel 25
Installing the Rear Module into the openGear Frame 26
Installing the AMX-8952 Card into an openGear Frame 26

Cabling 27

Cabling the Ethernet Port on the openGear Frame 27
Cabling the Reference Source for the AMX-8952 27
Video Cabling 28
Audio Cabling 29
AMX-8952-A 29
AMX-8952-B and AMX-8952-C 29
GPIO Cabling 30

Getting Started 31

Before You Begin 31
Launching DashBoard 31
Accessing the AMX-8952 Interfaces in DashBoard 31

Configuring the Network Settings 33
Before You Begin 33
Changing the Network Settings of the AMX-8952 33

Licensed Features 35
License Keys Overview 35
Installing a License Key 35
Removing a License Key 36

Reference Setup 37
Frame Rate Compatibility 37
Specifying a Global Analog Reference Source 38
Monitoring the Reference Signal via DashBoard 39

Video Configuration 41
Configure the SDI BI-DIR Port 41
Specifying the Output Format and Video Source 41
Enabling the Loss of Input Failover Mode 43
Specifying the Output During a Loss of Input 44
Specifying the Matte Color 45
Configuring the Bouncing Box Test Feature 45

Frame Sync Configuration 47
Before You Begin 47
Enabling Frame Sync Mode 47
Adjusting the Output Timing 48

Embedded Audio Setup 51
Sample Rate Conversion 51
Mapping the Embedded Audio Channels 51
Proc Amps for Embedded Audio 52
Processing the Embedded Audio Input 52

AES Setup 55
Mapping the AES Inputs and Outputs 55
Mapping the AES Signals 55
Mapping the AES Channels 55
Using the Audio Proc 56

Analog Audio Setup 59
Mapping the Analog Inputs and Outputs 59
Mapping the Analog Signals 59
Mapping the Analog Channels 59
Using the Audio Proc 60

Ancillary Data 63
Overview 63
HANC and VANC Status 63
CEA-708/CEA-608 Closed Captioning 63
CEA-608 and CEA-708 Captioning Priority 63
Other Data Types 64
Passing or Deleting ANC Data 64

Configuring the GPI/Tallies 67
GPI Communication Setup 67
Configuring a Port as a GPI 67
Tally Communication Setup 68

Upgrading the Software 69

DashBoard Menus 71
Global Interface 71
Signal Tab 71
Product Tab 72
Hardware Tab 73
Licensing State Tab 74
Setup Tab 74
Network Tab 76
Global Alarm Enables Tab 77
Security Tab 78
Configure Licenses Tab 78
AMX-8952 Interfaces 79
AMX-8952 Status Tab 79
Input Status Tab 81
Config Tab 84
Audio Tab 86
ANC Tab 89
GPI/Tally Tab 90

Technical Specifications 93
Supported Video Formats 93
SDI Inputs Specifications 94
SDI Outputs Specifications 94
AES Specifications 95
AMX-8952-A 95
AMX-8952-B 96
Analog Specifications 96
AMX-8952-C 96
GPIO 97
Environment 97
Power 98

Software Licenses 99
BSD 99
Dual GPL 99
GPL 99
LGPL 104
MIT 105
zlib 105

Service Information 107
Troubleshooting Checklist 107
Bootload Button 107
Warranty and Repair Policy 107

Glossary 109

Introduction

This guide covers the installation, configuration, and use of the AMX-8952-A, AMX-8952-B, and AMX-8952-C. The following chapters are included:

- **"Introduction**" summarizes the guide and provides important terms, and conventions.
- "**Before You Begin**" provides general information to keep in mind before installing and configuring your card.
- "**Hardware Overview**" provides a basic introduction to the hardware features including the cabling and monitoring features of the rear module.
- "**Physical Installation**" provides instructions for the physical installation of the card and its rear module, and provides information on connecting to your facility network.
- "**Cabling**" provides an overview of connecting input and output devices to the rear module of the AMX-8952-A, AMX-8952-B, and AMX-8952-C.
- "**Getting Started**" provides a general overview of the user controls available on the AMX-8952.
- "**Configuring the Network Settings**" outlines how to update the network settings assigned to the AMX-8952.
- "**Licensed Features**" outlines the available software licensed features, and how to install a software key for a licensed feature.
- "**Reference Setup**" outlines how to specify a global analog reference source for your card.
- "**Video Configuration**" outlines how specify the output format and video source for your card, and adjust the output timing. An overview of how to enable the Frame Sync, and the ACO features is also provided.
- "**Embedded Audio Setup**" outlines how to map the embedded audio channels, insert test tones, and set up processing of the embedded audio input.
- "**AES Setup**" outlines how to assign an AES port as an input or output, map the AES channels, and apply proc amps to individual AES channels.
- "**Analog Audio Setup**" outlines how to assign an ANLG port as an input or output, map the analog audio channels, and apply proc amps to individual audio channels.
- "**Ancillary Data**" provides an overview of the ANC processing features for your card.
- "**Upgrading the Software**" provides instructions for upgrading the software for your AMX-8952 using DashBoard.
- "**DashBoard Menus**" summarizes the AMX-8952 menus, items, and parameters in DashBoard.
- "**Technical Specifications**" provides technical specification details on the AMX-8952.
- "**Software Licenses**" provides third-party software license information for your card.
- "**Service Information**" provides information on the warranty and repair policy for your card.
- "**Glossary**" provides a list of terms used throughout this guide.

Related Publications

It is recommended to consult the following Ross Video documentation before installing and configuring your AMX-8952 series card:

- ***DashBoard User Guide***, Ross Part Number: 8351DR-004
- ***MFC-OG3-N and MFC-8322-S User Guide***[1], Ross Part Number: 8322DR-004

1. The AMX-8952 series requires the MFC-OG3-N Network Controller card to be installed in the openGear frame. The MFC-8322-S does not support the AMX-8952 series cards.

- ***OG3-FR Series User Guide***, Ross Part Number: 8322DR-005
- ***OGX-FR Series Quick Start Guide***, Ross Part Number: 8322DR-202
- ***OGX-FR Series User Guide***, Ross Part Number: 8322DR-204

Documentation Conventions

Special text formats are used in this guide to identify parts of the user interface, text that a user must enter, or a sequence of menus and sub-menus that must be followed to reach a particular command.

Interface Elements

Bold text is used to identify a user interface element such as a dialog box, menu item, or button. For example:

In the **Network** tab, click **Apply**.

User Entered Text

Courier text is used to identify text that a user must enter. For example:

In the **Language** box, enter **`English`**.

Referenced Guides

Text set in bold and italic represent the titles of referenced guides, manuals, or documents. For example:

For more information, refer to the ***DashBoard User Guide***.

Menu Sequences

Menu arrows are used in procedures to identify a sequence of menu items that you must follow. For example, if a step reads "**File** > **Save As**," you would click the **File** menu and then click **Save As**.

Important Instructions

Star icons are used to identify important instructions or features. For example:

✶ Contact your IT department before connecting to your facility network to ensure that there are no conflicts. They will provide you with an appropriate value for the IP Address, Subnet Mask, and Gateway for your device.

Contacting Technical Support

At Ross Video, we take pride in the quality of our products, but if problems occur, help is as close as the nearest telephone.

Our 24-hour Hot Line service ensures you have access to technical expertise around the clock. After-sales service and technical support is provided directly by Ross Video personnel. During business hours (Eastern Time), technical support personnel are available by telephone. After hours and on weekends, a direct emergency technical support phone line is available. If the technical support person who is on call does not answer this line immediately, a voice message can be left

and the call will be returned shortly. This team of highly trained staff is available to react to any problem and to do whatever is necessary to ensure customer satisfaction.

- **Technical Support**: (+1) 613-652-4886
- **After Hours Emergency**: (+1) 613-349-0006
- **E-mail**: techsupport@rossvideo.com
- **Website**: http://www.rossvideo.com

Before You Begin

If you have questions pertaining to the operation of your card, contact us at the numbers listed in "**Contacting Technical Support**". Our technical staff is always available for consultation, training, or service.

Each AMX-8952 card is a high quality program multiplexer that is extremely flexible in handling channel assignments and channel re-mapping as well as fully reconfigure, append, and overwrite capability for existing channels. **Table 1** summarizes the available card types of the AMX-8952 series.

Table 1 Available Models

Marketing Code	Product Description[a]
AMX-8952-A	HD/3G/12G-SDI Embedder/De-embedder, Unbalanced AES
AMX-8952-B	HD/3G/12G-SDI Embedder/De-embedder, Balanced AES
AMX-8952-C	HD/3G/12G-SDI Embedder/De-embedder, Analog Audio

a. Support for 12G formats requires the AMX-8952-UHD-LICENSE. Refer to "**Installing a License Key**" for details.

AMX-8952-A and AMX-8952-B Overview

The AMX-8952-A (**Figure 1**) and AMX-8952-B (**Figure 2**) are capable of embedding or de-embedding up to eight AES/EBU pairs (16 audio channels) into one HD/3G/12G-SDI signal. Audio proc control on each input allows for audio processing with independent channel Sample Rate Conversion (SRC), gain of +/-20dB, audio delay up to 1 second and channel phase invert and summing capability. If the input is a synchronous 48kHz signal, the audio can be embedded into the SDI signal unaltered. If the input is not a synchronous 48kHz signal, it may be converted using SRC before it is embedded on the SDI output.

✶ The AMX-8952-A offers eight 75ohm unbalanced AES connections while the AMX-8952-B offers eight 110ohm balanced AES connections.

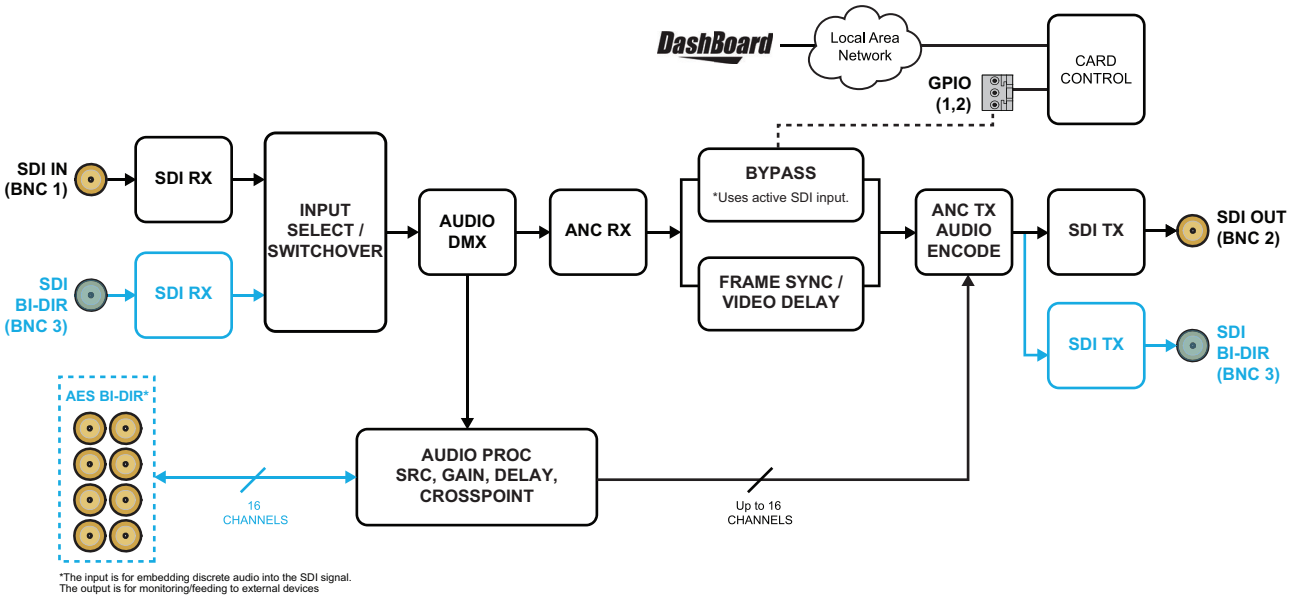

Figure 1 AMX-8952-A — Simplified Block Diagram

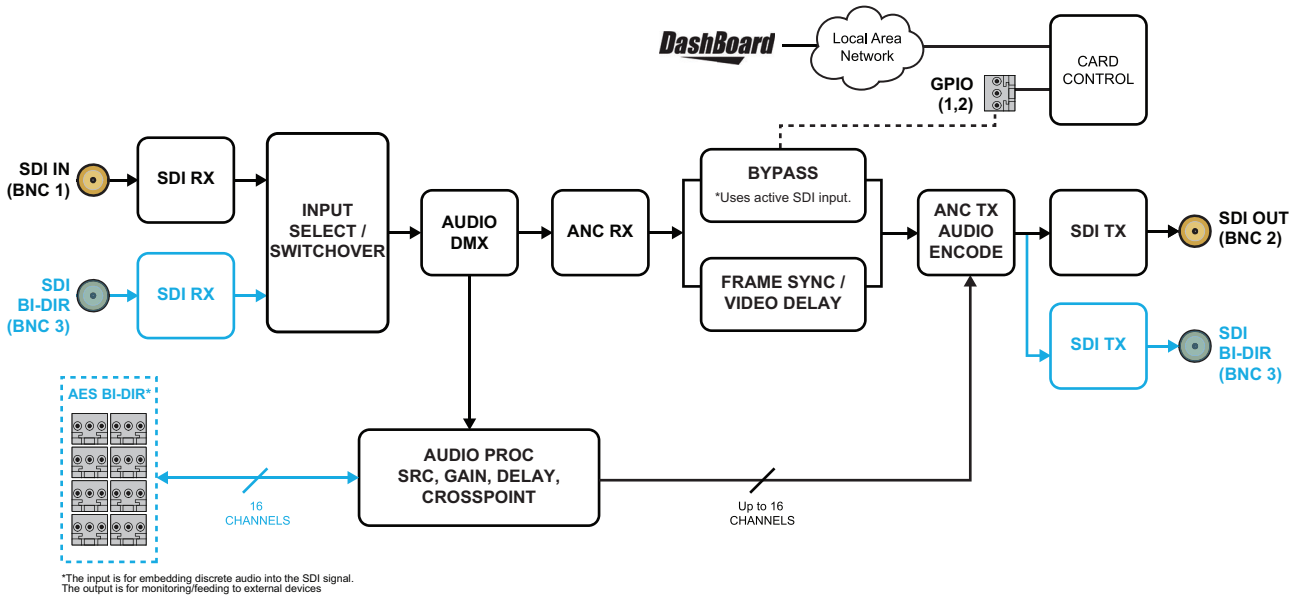

Figure 2 AMX-8952-B — Simplified Block Diagram

AMX-8952-C Overview

The AMX-8952-C includes one multi-rate SDI input which supports up to 16 channels of embedded audio and 4 (pairs) of analog audio I/O. (**Figure 3**) The AMX-8952-C is capable of embedding or de-embedding up to four analog audio pairs into an HD/3G/12G-SDI signal. Audio proc controls on each input allows for gain control of +/- 10dB, audio delay up to 1 second, and channel phase invert and summing capability.

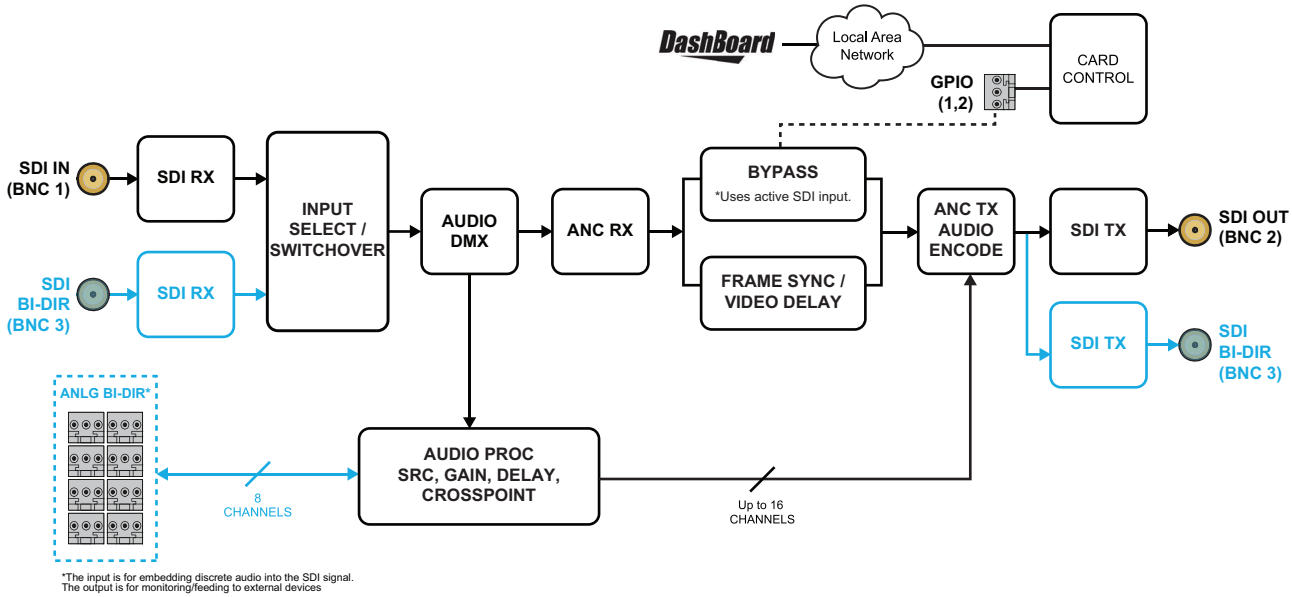

Figure 3 AMX-8952-C — Simplified Block Diagram

Features

The following features are standard for the AMX-8952 series:

- Supports embedding of non-PCM data such as Dolby® Digital and Dolby® E
- Two SDI processed outputs
- Audio embedding for all popular formats
- Full control over channel assignments, primary and backup sources
- Audio proc controls such as gain, invert, delay, and sum
- Internally generated test patterns and test tones
- Programmable video output on SDI input loss
- Automatic input video format detection
- Backup audio insertion on audio input loss
- Programmable silence detection and timeout thresholds
- Ability to strip VANC data from specific or all lines of a video output
- Reports status and configuration remotely via the DashBoard Control System
- Fits openGear frames
- 5-year transferable warranty

User Interfaces

The AMX-8952 includes two interfaces for control and monitoring for your card.

DashBoard Control System

The DashBoard Control System enables you to monitor and control openGear frames and cards from a computer. DashBoard communicates with other cards in the openGear frame through the Network Controller Card. The DashBoard Control System software and manual are available for download from our website.

For More Information on...

- on the AMX-8952 menus in DashBoard, refer to "**DashBoard Menus**".
- on using DashBoard, refer to the ***DashBoard User Guide*** available from our website.

SNMP Monitoring and Control

The Network Controller Card in the openGear frame can provide optional support for remote monitoring of your frame and using Simple Network Management Protocol (SNMP), which is compatible with many third-party monitoring and control tools.

For More Information on...

- on enabling SNMP Monitoring and Control for your frame, refer to the ***MFC-OG3-N and MFC-8322-S User Guide***.
- on SNMP controls for the AMX-8952, refer to your AMX-8952 Management Information Base (MIB).

Hardware Overview

This chapter presents information on the AMX-8952 hardware components and features.

Marketing Codes Overview

The AMX-8952 is an openGear modular system composed of two sub-systems.

- a main PCB which connects to a rear module and the openGear frame midplane
- a rear module that provides physical connectors

Table 2 outlines which rear module mates with specific main PCB version and openGear frames.

Table 2 Rear Modules — Supported openGear Frames

Main PCB Marketing Code	PCB Part Number	Rear Module Marketing Code	Rear Module Part Number	Supported openGear Frame
AMX-8952-A	8952AR-001A	R3A-8952	8322AR-329	OG3-FR, OGX-FR
AMX-8952-B	8952AR-001B	R3B-8952	8322AR-330	OG3-FR, OGX-FR
AMX-8952-C	8952AR-002A	R3C-8952	8322AR-330	OG3-FR, OGX-FR

Notice — *Installing the AMX-8952 in a frame other than the OG3-FR or OGX-FR could damage the card, the rear module, or both.*

Main PCB Overview

The main PCB is a typical openGear card. An ejector on one end secures the module to the slot inside the openGear frame, and the other end inserts into a connector on the back of the rear module.

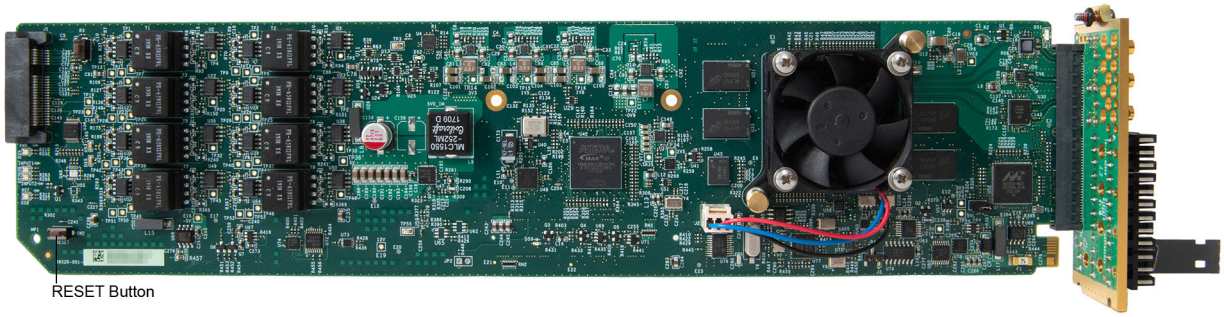

Figure 4 AMX-8952 — Base Card Components

RESET Button

Pressing this button resets the microprocessor and re-initializes the card. This is a hard reset of the card. This action should only be before as advised by Ross Video Technical Support.

Monitoring via the Card-edge

The front-edge of the main PCB has LED indicators for indicating alarms, and communication activity. (**Figure 5**)

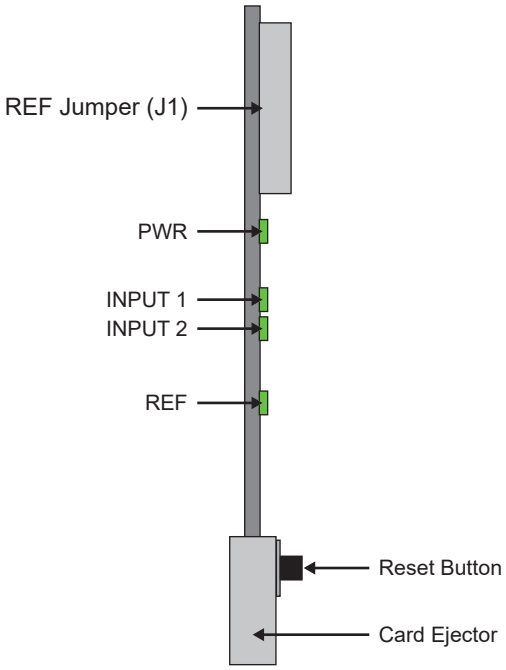

Figure 5 Card-edge Features

Table 3 provides information on the LED displays.

Table 3 AMX-8952 LED Descriptions

LED	Color	Description
PWR	Green	The card is powered on and is operating correctly
	Flashing	The card software is updating
	Red	When lit red, this LED indicates: • the card is booting, or • a major alarm condition is occurring on the card
	Off	The card is not powered on
INPUT 1	Green	A valid SDI input signal is detected on the SDI IN BNC
	Flashing Green/Red	A valid SDI input signal is detected on the SDI IN BNC, but the card is not locked to a reference signal
	Red	The SDI input signal connected to the SDI IN BNC is not valid
INPUT 2	Green	A valid SDI input signal is detected on the SDI BI-DIR BNC
	Flashing Green/Red	A valid SDI input signal is detected on the SDI BI-DIR BNC, but the card is not locked to a reference signal
	Red	The SDI input signal connected to the SDI BI-DIR BNC is not valid
	Off	The SDI BI-DIR BNC is configured as an output in DashBoard
REF	Green	A valid reference signal is detected on the REF IN BNC
	Red	An unsupported reference signal is detected on the REF IN BNC

Supported Rear Modules

This section summarizes the connections and cabling designations for each AMX-8952 series card. Each rear module occupies two slots in the openGear frame and accommodates one card.

For More Information on...

- connecting input and output devices to the rear modules, refer to "**Cabling**".

AMX-8952-A

The AMX-8952-A includes the following connections:

- 1 SDI input BNC
- 1 SDI output BNC
- 1 bi-directional SDI BNC
- 8 AES unbalanced connections on BNCs
- 2 GPIO connections

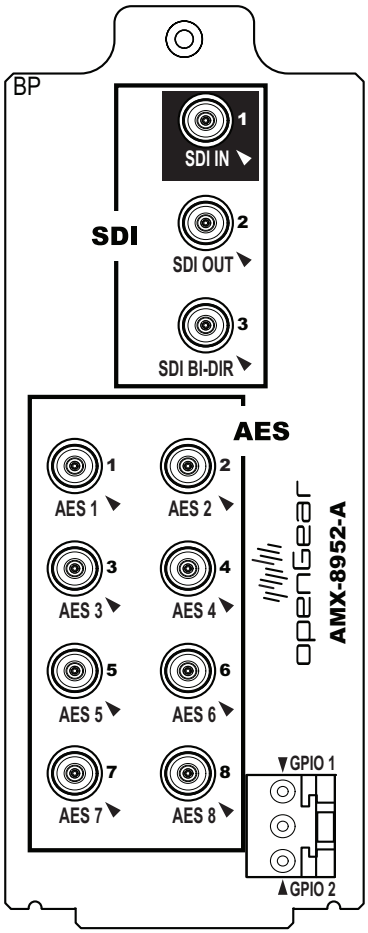

Figure 6 Cabling Designations — AMX-8952-A

AMX-8952-B

The AMX-8952-B includes the following connections:

- 1 SDI input BNC
- 1 SDI output BNC
- 1 bi-directional SDI BNC
- 8 embedded audio balanced connections on 3-pin connectors
- 2 GPIO connections

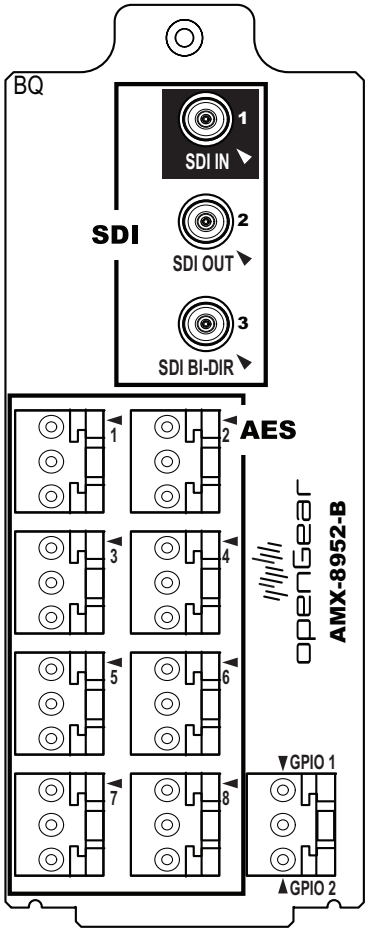

Figure 7 Cabling Designations — AMX-8952-B

AMX-8952-C

The AMX-8952-C includes the following connections:

- 1 SDI input BNC
- 1 SDI output BNC
- 1 bi-directional SDI BNC
- 8 analog balanced analog connections on 3-pin connectors
- 2 GPIO connections

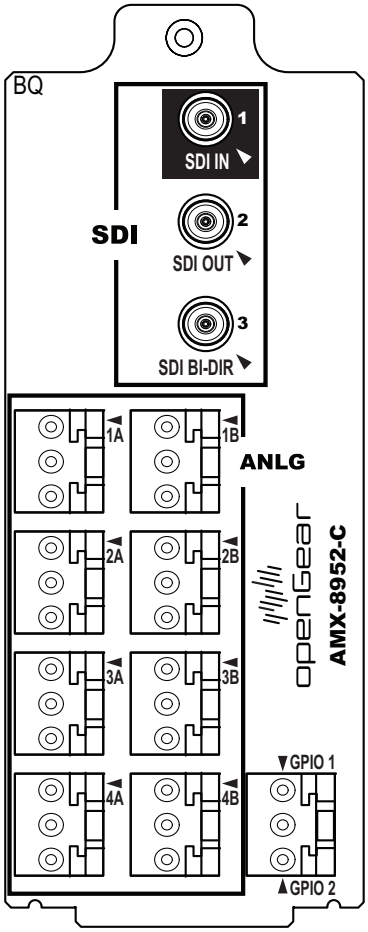

Figure 8 Cabling Designations — AMX-8952-C

Physical Installation

Installing an AMX-8952 series card into the openGear frame requires you to remove the blank plates in the designation frame slots, install the required rear module into the frame rear panel, and then install the AMX-8952 series card into the required frame slot.

If you have questions pertaining to the installation of your card, contact us at the numbers listed in "**Contacting Technical Support**". Our technical staff is always available for consultation, training, or service.

✶ The AMX-8952 series requires the MFC-OG3-N Network Controller card to be installed in the openGear frame. The MFC-8322-S does not support the AMX-8952 series cards.

Before You Begin

These installation guidelines assume the following:

- Ensure the openGear frame frame is properly installed. Refer to the ***User Guide*** for your frame.
- A valid IP addresses is available for the AMX-8952.
- If the rear module is already installed in the openGear frame, proceed to "**Installing the AMX-8952 Card into an openGear Frame**".

Static Discharge

Throughout this chapter, please heed the following cautionary note:

ESD Susceptibility — *Static discharge can cause serious damage to sensitive semiconductor devices. Avoid handling circuit boards in high static environments such as carpeted areas and when synthetic fiber clothing is worn. Always exercise proper grounding precautions when working on circuit boards and related equipment.*

Removing the Blank Plates from the Rear Panel

When a frame slot is not populated with an openGear card, a blank plate must be installed to ensure proper frame cooling and ventilation.

Notice — *Installing the rear modules in a frame other than an OG3-FR or OGX-FR series frame could damage the card, the rear module, or both.*

To remove a blank plate from the openGear frame

1. Locate the slots in the openGear frame you wish to install the AMX-8952 into. It is recommended to use the following slot combinations:
   - Slots 1, 2
   - Slots 3, 4
   - Slots 5, 6
   - Slots 7, 8
   - Slots 9, 10
   - Slots 11, 12
   - Slots 13, 14
   - Slots 15, 16
   - Slots 17, 18
   - Slots 19, 20
2. Use a Phillips screwdriver to unfasten each blank plate from the openGear frame backplane.
3. Remove each blank plate from the chassis and set aside.

Installing the Rear Module into the openGear Frame

If the rear module is already installed in the openGear frame, proceed to the section "**Installing the AMX-8952 Card into an openGear Frame**".

To install a rear module into the openGear frame

1. For each retaining screw on the rear module, push the o-ring to the end of the screw (but not off the screw). This will help to align the rear module to the frame backplane in step 3.
2. Seat the bottom of the rear module in the seating slots at the base of the openGear frame's backplane.
3. Align the top holes of the rear module with the screw holes on the top-edge of the frame backplane.
4. Using a Phillips screwdriver and the provided screw, fasten the rear module to the backplane.

✶ Do not fully tighten the screws until after installing the card and you have verified that the AMX-8952 card aligns with the rear module.

Installing the AMX-8952 Card into an openGear Frame

The slot that the AMX-8952 installs into depends on the slot combination you installed the rear module in. This allows adequate spacing to avoid damaging the card, the cards installed in the neighboring slots, or both.

To install the AMX-8952 into the openGear frame

1. Locate the slot the AMX-8952 card will slide into. Refer to **Table 4** for valid slot combinations.

Table 4 Card Slot Combinations

Rear Module is Installed in	Card Installs into Slot
Slots 1, 2	1
Slots 3, 4	3
Slots 5, 6	5
Slots 7, 8	7
Slots 9, 10	9
Slots 11, 12	11
Slots 13, 14	13
Slots 15, 16	15
Slots 17, 18	17
Slots 19, 20	19

2. Verify that the AMX-8952 card aligns with the rear module.
3. Using a Phillips screwdriver fasten the rear module to the backplane using the provided screws.

✶ Do not over tighten the screws.

4. Hold the card by the edges and carefully align the card edges with the slot rails in the frame.
5. Fully insert the card into the frame until the card is properly seated in the rear module.

Cabling

This chapter provides an overview of connecting input and output devices to the rear module of the AMX-8952-A, AMX-8952-B, and AMX-8952-C.

If you have questions pertaining to the installation of AMX-8952, contact us at the numbers listed in "**Contacting Technical Support**". Our technical staff is always available for consultation, training, or service.

For More Information on...

- the specifications for the AMX-8952, refer to "**Technical Specifications**".

Cabling the Ethernet Port on the openGear Frame

You must provide an Ethernet connection to the openGear frame that houses the AMX-8952.

The AMX-8952 is connected to your network via the MFC-OG3-N in the openGear frame. This enables the AMX-8952 to interface with other cards in the frame, and the computer running the DashBoard client. After a physical connection is established, DashBoard is used to configure the network settings for the AMX-8952.

Contact your IT department before connecting to your facility network to ensure that there are no conflicts. They will provide you with an appropriate value for the IP Address, Subnet Mask, and Gateway for your AMX-8952.

✶ Contact your network administrator if problems are experienced when connecting to a network hub.

For More Information on...

- the Ethernet port on the openGear frame, refer to the user guide for your frame.

Cabling the Reference Source for the AMX-8952

The openGear frame frame provides two reference input connections that the AMX-8952 can use as a reference source. The rear module also supports using the source connected to the **SDI IN** BNC as a local reference input.

This section outlines the reference cabling designations on the AMX-8952 rear module.

For More Information on...

- specifying the reference source for your card, refer to "**Reference Setup**".
- cabling the REF ports on your openGear frame, refer to the ***OGX-FR Series User Guide.***

To cable a local reference source for your card via the rear module

1. Connect one end of a cable to the **SDI IN** HD-BNC on the AMX-8952 rear module.

   Refer to the following figures for cabling designations.

2. Connect the other end of the same cable to the applicable output port on the external reference source device.

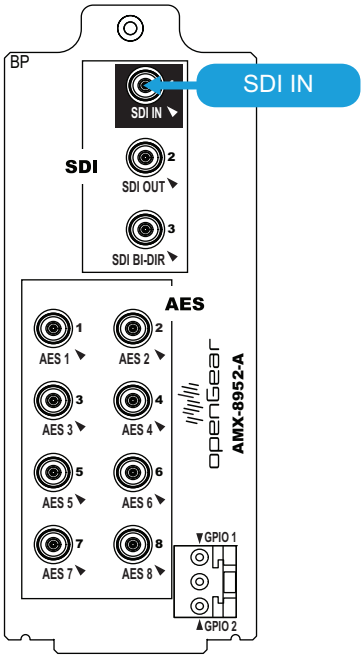

Figure 9 AMX-8952-A — Local REF

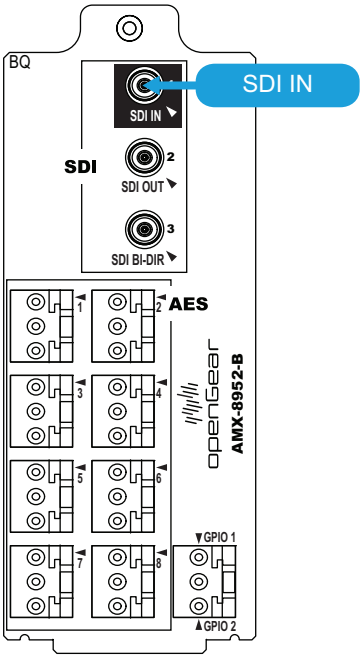

Figure 10 AMX-8952-B — Local REF

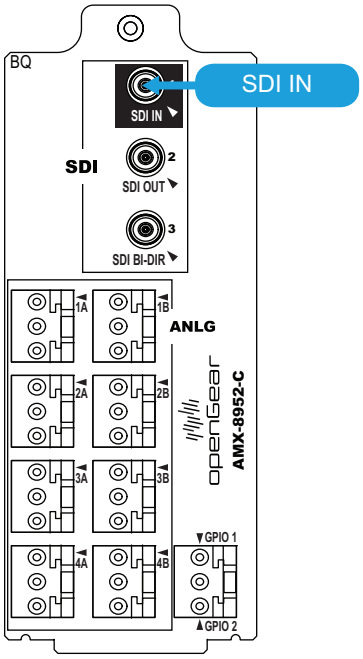

Figure 11 AMX-8952-C — Local REF

Video Cabling

Each rear module provides one SDI input, one SDI output, and one SDI bi-directional connection.

For More Information on...

- the Loss of Input Failover mode, refer to "**Enabling the Loss of Input Failover Mode**".

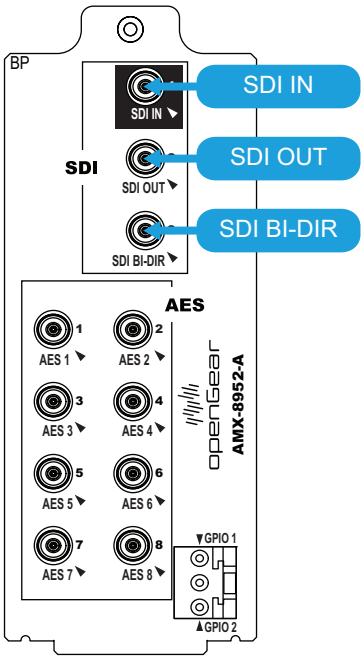

Figure 12 AMX-8952-A — SDI Cabling

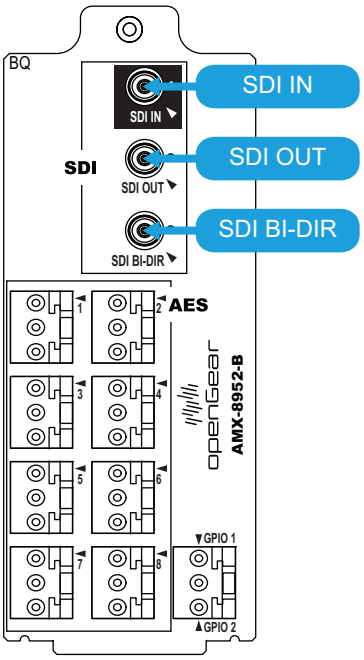

Figure 13 AMX-8952-B — SDI Cabling

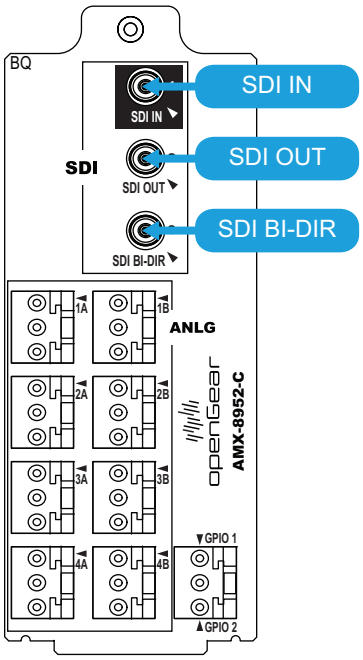

Figure 14 AMX-8952-C — SDI Cabling

Audio Cabling

This section outlines the audio cabling designations for each AMX-8952 rear module.

AMX-8952-A

The 8322AR-329 rear module provides eight unbalanced audio connections for AES sources via HD-BNC ports. (**Figure 15**)

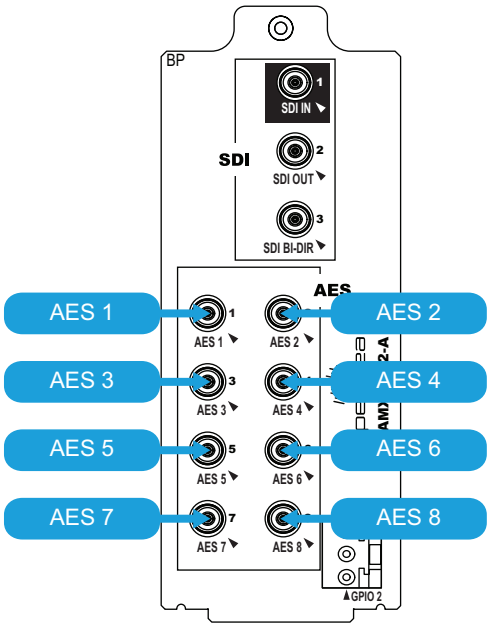

Figure 15 AES Cabling — AMX-8952-A

AMX-8952-B and AMX-8952-C

The AMX-8952-B and AMX-8952-C each require the 8322AR-330 rear module. The 8322AR-330 rear module provides eight balanced audio connections on 3-pin connectors.

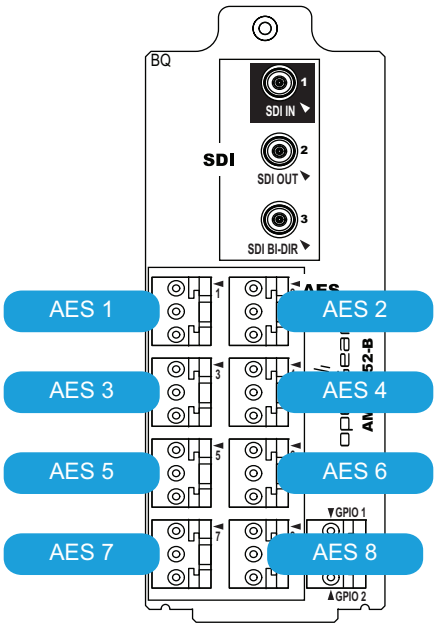

Figure 16 AMX-8952-B — AES Designations

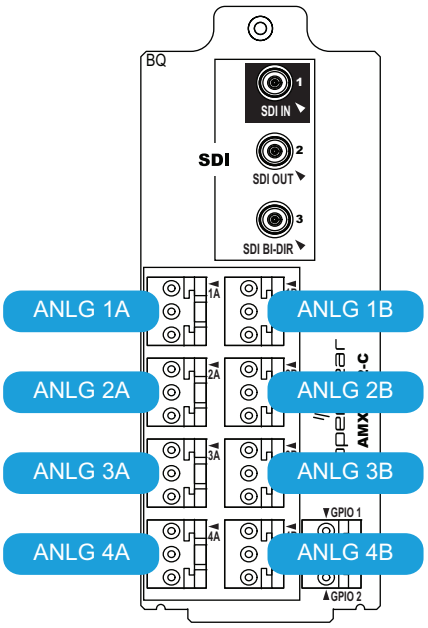

Figure 17 AMX-8952-C — ANLG Designations

Cable your rear module using the following procedure.

To wire the audio for the 8322AR-330

1. Insert an audio wire to the designated polarity slot on the connector of the rear module.

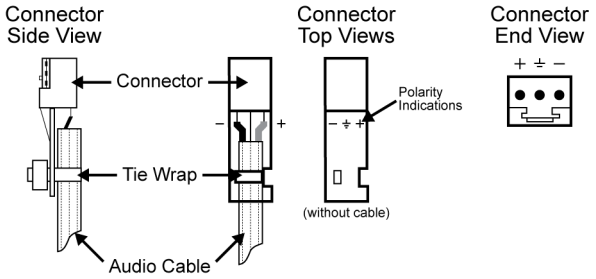

2. Use a tweaker screwdriver to tighten the corresponding capture screw.
3. Repeat steps 1 and 2 for each wire on each connector.
4. Once the cables are wired to the connectors, install the connectors on the terminal blocks for the rear module.

GPIO Cabling

Each card provides two General Purpose Input (GPI) and Tally ports to interface with external equipment. The GPIO ports are available on 3-pin connectors located on the rear module. The 3-pin mating connectors are provided with the rear module.

Ports are user programmable to be either an input (GPI) or an output (Tally). Electrically, the ports are set up for contact closure to ground, with 4.75Kohm pull-up resistor to +5V, so they default to a logical high state.

Figure 18 shows the GPIO designations for all rear module types.

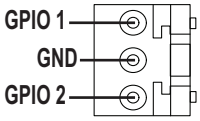

Figure 18 GPIO Designations — All Rear Module Types

For More Information on...

- configuring the GPIO ports, refer to "**Configuring the GPI/Tallies**".

Getting Started

This chapter provides instructions for launching DashBoard, and accessing the AMX-8952 interfaces in DashBoard.

If you have questions pertaining to the operation of AMX-8952, contact us at the numbers listed in "**Contacting Technical Support**". Our technical staff is always available for consultation, training, or service.

Before You Begin

Ensure that:

- An MFC-OG3-N or MFC-OGX-N Network Controller Card is installed in your openGear frame.
- The openGear frame that houses the AMX-8952 displays in the Basic Tree View of DashBoard.
- The AMX-8952 displays as a sub-node in the openGear frame tree.
- Your facility IT Department provided the required network settings to be assigned to the AMX-8952.

Launching DashBoard

DashBoard must run on a computer that has a physical wired Ethernet connection. Wireless connections do not allow device discovery.

For More Information on...

- downloading and installing the DashBoard client software, refer to the ***DashBoard User Guide***.
- the AMX-8952 interfaces in DashBoard, refer to the chapter "**DashBoard Menus**".

To launch DashBoard

1. Ensure that you are running DashBoard software version 9.2.0 or higher.
2. Launch DashBoard by double-clicking its icon on your computer desktop.

Accessing the AMX-8952 Interfaces in DashBoard

The interfaces are accessed by double-clicking the AMX-8952 node in the DashBoard Tree View.

To access the AMX-8952 interfaces in DashBoard

1. Launch DashBoard.
2. In the Basic Tree View of DashBoard, locate the openGear frame the AMX-8952 is installed in.
3. Expand the openGear frame node to display a list of sub-nodes that represent an openGear card installed in a specific frame slot.
4. Locate the AMX-8952 node in the openGear frame tree.
5. Expand the AMX-8952 node to display a list of sub-nodes for the card.

   The first sub-node provides access to the **Global** settings for the card. The second sub-node provides an interface for configuring the inputs and outputs of the AMX-8952.
6. Double-click the **Global** sub-node to display that interface in the right pane of the DashBoard window.

   The Signal and Setup tabs are automatically selected in the left and right panes respectively.

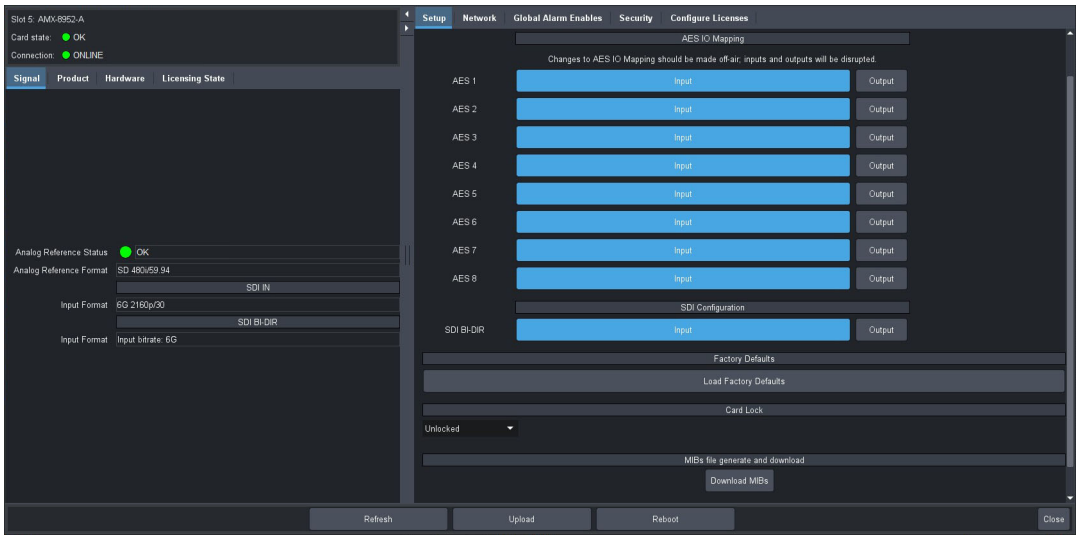

7. Double-click the **AMX-8952** sub-node to display the interface for that feature in the right pane of the DashBoard window.

   The AMX-8952 Status and Input Status tabs are automatically selected in the left and right panes respectively.

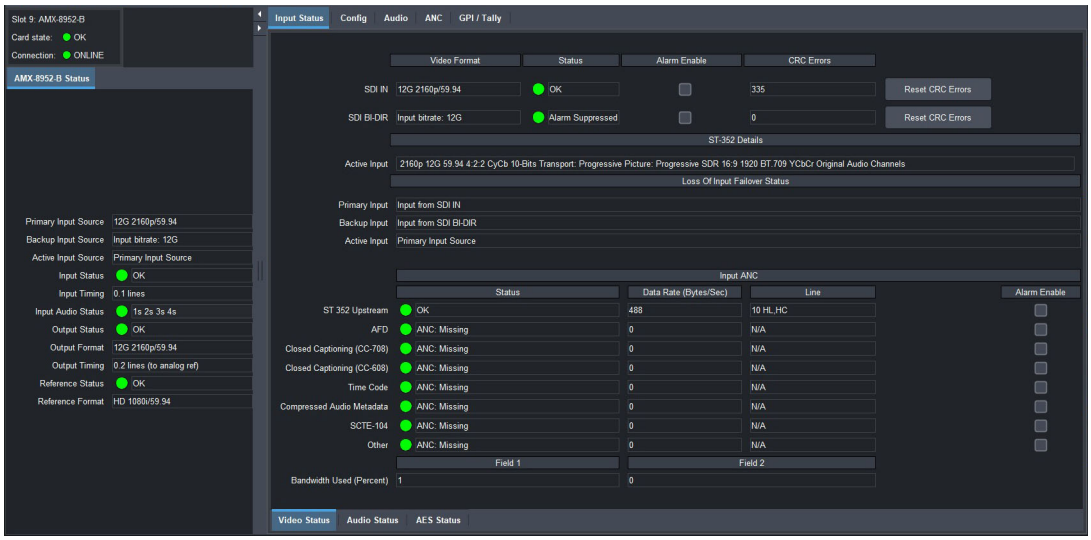

Configuring the Network Settings

This chapter outlines how to update the network settings assigned to the AMX-8952.

✶ If difficulties or problems are experienced when assigning IP addresses, contact your network administrator.

Before You Begin

Ensure that:

- The OGX-FR frame that houses the AMX-8952 displays in the Basic Tree View of DashBoard
- The AMX-8952 displays as a sub-node in the OGX-FR frame tree
- Your facility IT Department has provided you with the settings to be assigned to the AMX-8952

Changing the Network Settings of the AMX-8952

Once you have establish connection to the card, you may want to change the IP Address from the default setting to one that was provided by your IT Department.

✶ Ross Video recommends using a static IP Address.

To change the network settings for the AMX-8952

1. Display the Global interface as outlined in "**To access the AMX-8952 interfaces in DashBoard**".
2. Select the **Network** tab.
3. If you are manually configuring the Ethernet settings for the AMX-8952:
   a. Use the **Mode** menu to select **Static**.
   b. Use the **Static IP Address** field to specify the new static IP Address for the AMX-8952. This is the address the card will use within the openGear frame.
   c. Use the **Subnet** field to specify the subnet mask for your network.
   d. Use the **Static Gateway** field to specify the gateway for communications outside of the local area network (LAN) the card will use.
4. If you want the network settings to be automatically obtained, select **DHCP** from the **Mode** menu.
5. Click **Apply** to save the new settings.

✶ The AMX-8952 card reboots automatically.

Licensed Features

The AMX-8952 has software licenses for enabling functions and features of the card. This chapter outlines the available software licensed features, and how to install a software key for a licensed feature.

License Keys Overview

Table 5 provides a brief summary on the types of licensed features available for the AMX-8952.

Table 5 List of AMX-8952 Licensed Features

License	Description
AMX-8952-FS-LICENSE	Frame sync license
AMX-8952-UHD-LICENSE	UHD license

Installing a License Key

Ross Video uses license keys to control user access to specific AMX-8952 features. You can obtain a key for a AMX-8952 licensed feature from Ross Video Technical Support.

To install a license key

1. Display the Global interface as outlined in "**To access the AMX-8952 interfaces in DashBoard**".
2. Select the **Configure Licenses** tab.

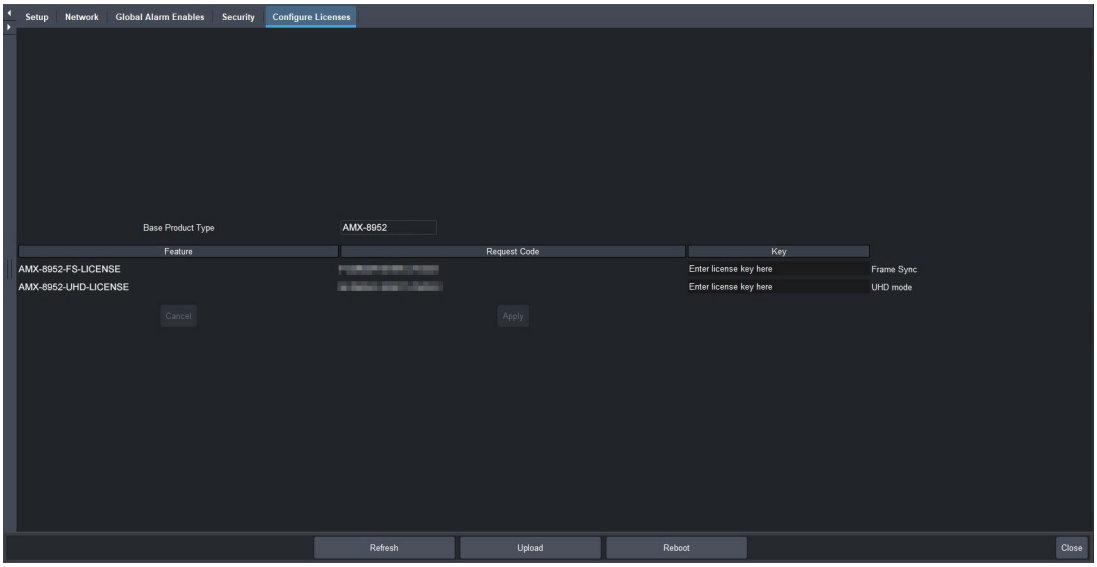

3. Make a note of the character string in the **Request Code** field for the feature you wish to enable.
4. Contact Ross Video using the information found in the section "**Contacting Technical Support**".
   a. When you speak to your Technical Support representative, tell them your name, your facility name, and the **Request Code** from the **Configure Licenses** tab.
   b. You will be given a License Key that must be entered in the applicable field in the **Licenses** table.

5. Enter the provided License Key in the applicable **Key** field in the **Configure Licenses** tab.
6. Click **Apply** in the row for the License Key you entered in step 5.

Removing a License Key

Disabling a License Key removes user access to the AMX-8952 features associated with that License Key.

✶ To re-enable the features, you will need to contact Ross Technical Support and request a new License Key.

To remove a AMX-8952 license key

1. Display the Global interface as outlined in "**To access the AMX-8952 interfaces in DashBoard**".
2. Select the **Configure Licenses** tab.
3. Click in the **Key** field for the licensed feature you want to remove.
4. Type **`remove`**.
5. Click **Apply** to remove the license.

Reference Setup

This chapter outlines how to specify and monitor a global analog reference source for your card.

Frame Rate Compatibility

The card supports a number of reference modes for both internal and external reference signals. The card allows you to use any interlaced video format to operate the card in any format of the same frequency; however, the use of 480i or 576i (Composite Sync) reference signals for High Definition (720p, 1080i, or 1080p) video modes is not recommended.

✶ When using a progressive format reference signal to lock an interlaced format video signal, the lock will be Frame Locked but Field indeterminate.

Table 6 outlines the AMX-8952 frame rate compatibility.

Table 6 Output/Reference Compatibility

Card Format	Required Reference
HD-SDI Formats	
720p 50Hz	576i
	720p 50Hz
	1080i 50Hz
720p 59.94Hz	480i
	720p 59.94Hz
	1080i 59.94Hz
1080i 50Hz	576i
	1080i 50Hz
1080i 59.94Hz	480i
	1080i 59.94Hz
1080pSF 23.98Hz	1080pSF 23.98Hz
1080pSF 24Hz	1080pSF 24Hz
1080p 23.98Hz	1080p 23.98Hz
1080p 24Hz	1080p 24Hz
1080p 25Hz	576i
	1080i 50Hz
1080p 29.97Hz	480i
	1080i 59.94Hz
1080p 30Hz	1080p 30Hz
1080p 50Hz	576i
	1080i 50Hz
	720p 50Hz

Table 6 Output/Reference Compatibility

Card Format	Required Reference
1080p 59.94Hz	480i
	720p 59.94Hz
	1080i 59.94Hz
1080p 60Hz	720p 60Hz
	1080i 60Hz
6G-SDI Formats[a]	
2160p 23.98Hz	1080p 23.98Hz
2160p 24Hz	1080p 24Hz
2160p 25Hz	576i
	720p 50Hz
	1080i 50Hz
2160p 29.97Hz	480i
	1080i 59.94Hz
2160p 30Hz	1080p 30Hz
12G-SDI Formats[a]	
2160p 50Hz	576i
	720p 50Hz
	1080i 50Hz
2160p 59.94Hz	480i
	720p 59.94Hz
	1080i 59.94Hz

a. Requires the AMX-8952-UHD-LICENSE. Refer to "**Installing a License Key**" for details.

Specifying a Global Analog Reference Source

✶ The output video frame rate must match this reference frame rate.

To specify a global analog reference source for the AMX-8952

1. Display the **Global** interface as outlined in "**To access the AMX-8952 interfaces in DashBoard**".
2. Select the **Setup** tab.
3. Use the **Reference Source** options to specify the source for the reference input signal. Choose from the following:
   - Frame 1 — uses the source connected to the REF 1 port on the openGear frame.
   - Frame 2 — uses the source connected to the REF 2 port on the openGear frame.
   - Input SDI — uses the SDI IN signal (as defined in the Video Input area) as the reference source.

Monitoring the Reference Signal via DashBoard

The status of the AMX-8952 may be monitored via its fields in the DashBoard client software or the LEDs located on the front panel of the chassis.

To configure the reference alarm for the AMX-8952

1. Display the Global interface as outlined in "**To access the AMX-8952 interfaces in DashBoard**".
2. Select the **Global Alarm Enables** tab.
3. Select the **Reference Format** box to enable the following fields to report when a reference is not detected:
   - **Global** > **Card state** (located in the top left corner of the Global interface)
   - **Global** > **Signal** > **Analog Reference Status**

Video Configuration

This chapter outlines how to specify the output format and video source, and define the card behavior during a loss of the input signal.

Configure the SDI BI-DIR Port

Each rear module includes a BNC that is an SDI bi-directional (BI-DIR) port. This provides the opportunity to assign the port as an input or output depending on your system needs.

- When this port is assigned as an input, it can be used as a backup video source (see "**To define the primary SDI signal for the Loss of Input Failover mode**").
- When this port is assigned as an output, it can be used as a second SDI output for the card. In output mode:
  - › The Input Status tab does not report the status of the SDI BI-DIR signal.
  - › The Loss of Input Failover feature is disabled.
  - › The Primary Video Source menu is locked to Input From SDI IN.
  - › The Backup Video Source menu is disabled and reports N/A.
  - › The switch between audio sources is ramped over 1 frame.

To assign a function to the SDI BI-DIR port

1. Display the **Global** interface as outlined in "**To access the AMX-8952 interfaces in DashBoard**".
2. Select the **Setup** tab.
3. Locate the **SDI Configuration** area of the tab.

4. Perform one of the following:
   - Click **Input** to configure the SDI BI-DIR port as an input.
   - Click **Output** to configure the SDI BI-DIR port as an output.

Specifying the Output Format and Video Source

You need to specify the video format for the card output and the source for the signal. Keep the following in mind:

- If you select Matte or Test Pattern for the Video Output — The output will follow the format of the last valid input signal. You can still override the format by selecting a different format from the Output Format menu.
- If you select Video In for the Video Output and the Loss-of-Input is set to Matte/Test pattern — Should the input fail, the output will be in the format of the last valid SDI input and displayed in the Output Format menu. You cannot override the output format.

To specify the output format and video source for your card

1. Display the Global interface as outlined in "**To access the AMX-8952 interfaces in DashBoard**".
2. Select the **Config** tab.

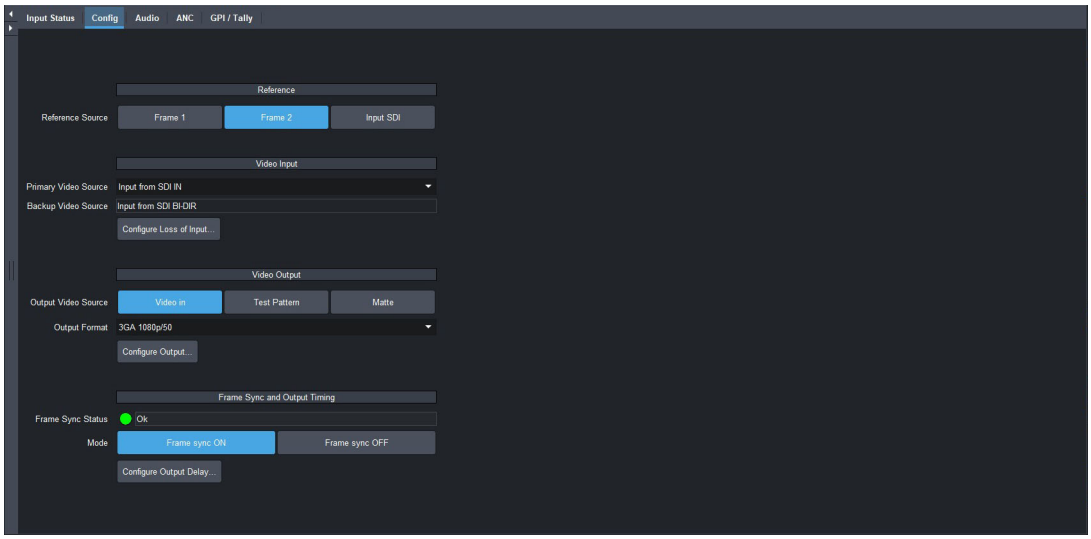

3. Locate the **Video Output** area of the tab.
4. Use the **Output Video Source** to specify the video signal the AMX-8952 will output. Choose from the following:
   - **Video in** — The output uses the active SDI input signal. Note that the Output Format menu is now read-only. The output will apply the last valid video input video format.
   - **Test Pattern** — A SMPTE bars test pattern will replace all of the output picture (but not the HANC and VANC).
   - **Matte Pattern** — A solid (single) color pattern will replace all of the output picture (but not the HANC and VANC). Refer to "**Specifying the Matte Color**" to set the color for the matte pattern.
5. If you chose Test Pattern or Matte Pattern in step 4, use the **Output Format** menu to select the video format. Ensure that the output format is compatible with the selected reference format.

✶ The Output Format setting overrides the Loss of Input video format.

6. Click **Configure Output**.

   The **Output** dialog opens.

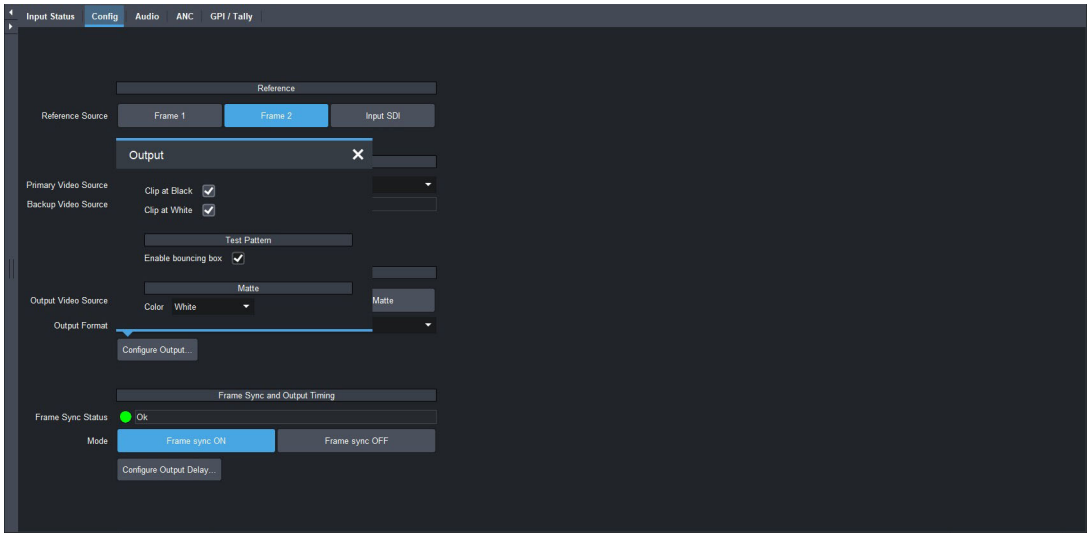

7. Enable the Clip White or Clip Black feature as outlined in **Table 26**.
8. Close the **Output** dialog.

Enabling the Loss of Input Failover Mode

By default, the AMX-8952 card provides a Loss of Input Failover feature where user can manually switch from the primary SDI input signal to a secondary (backup) SDI input signal. The card stays on the secondary SDI input signal until the user manually switches the card back to the primary signal.

✶ On manual failover, the card will perform a clean/quiet switch if both SDI inputs are stable and the same video format.

The user defines which SDI video signal (BNC 1 or BNC 3) is the primary and secondary using the options in the AMX-8952 > Config tab. This tab also displays the button used to manually switch the signals from primary to secondary (and vice versa).

To define the primary SDI signal for the Loss of Input Failover mode

1. Display the **AMX-8952** interface as outlined in "**To access the AMX-8952 interfaces in DashBoard**".
2. Select the **Config** tab.
3. Locate the **Video Input** area of the tab.
4. Use the **Primary Video Source** menu to assign an SDI input signal as the primary signal for the Loss of Input Failover mode. Choose from the following:
   - Input from SDI IN — Assigns SDI IN (BNC 1) as the primary input signal when ACO is enabled.
   - Input from SDI BI-DIR — Assigns SDI BI-DIR (BNC 3) as the primary input signal when ACO is enabled.

✶ You cannot assign the same SDI signal as the **Primary Video Source** and the **Backup Video Source**.

To enable Failover mode and switch the SDI input signals

1. Display the **AMX-8952** interface as outlined in "**To access the AMX-8952 interfaces in DashBoard**".
2. Select the **Config** tab.
3. Click **Configure Loss of Input**.

   The **Loss of Input** dialog opens.

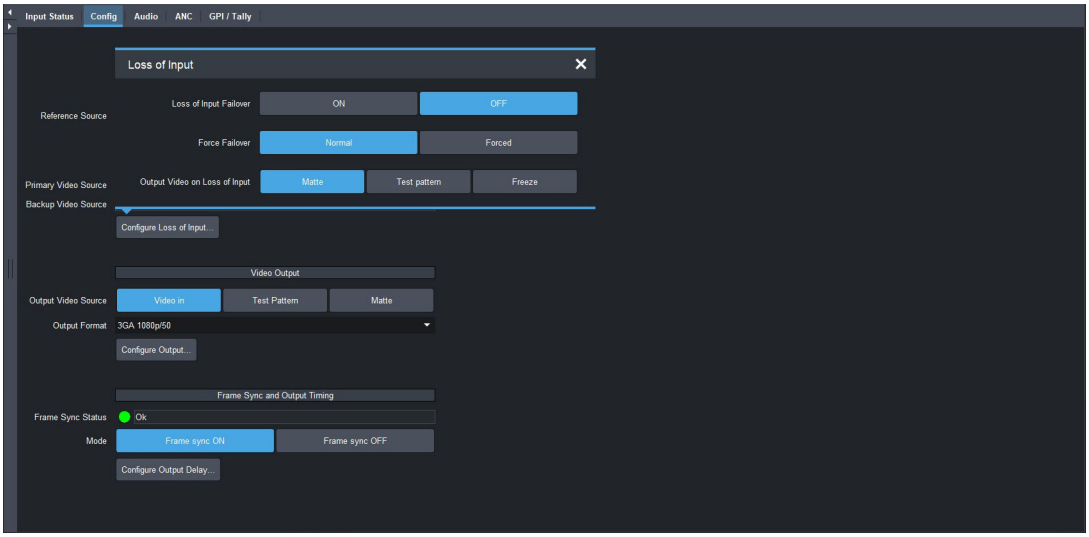

4. In the **Loss of Input Failover** area, click **ON**.

   The **ON** button automatically is lit (active) and the card switches from one signal to the other as defined in "**To define the primary SDI signal for the Loss of Input Failover mode**".

5. Use the **Force Failover** options to determine when the failover occurs. Choose from the following:

✶ When forcing a switchover, the AMX-8952 performs a clean/quiet switch between inputs if the signals are both valid and the same format. The Frame Sync must be enabled to perform a clean switch between mis-timed sources.

- Normal — When a loss of input occurs, the card automatically switches to the other video source.
- Forced — The user manually switches to the other video source by clicking the Loss of Input Failover buttons.

6. Close the **Loss of Input** dialog.

To verify the current active SDI input signal

1. Display the **AMX-8952** > **Input Status** tab in DashBoard.
2. Locate the **Loss of Input Failover Status** area of the tab.

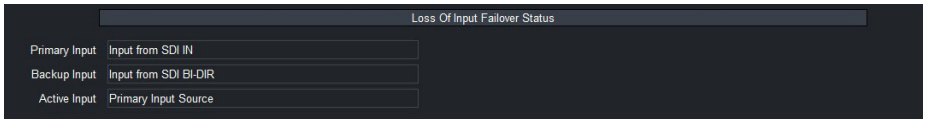

3. Use the **Primary Input** field to determine which SDI input signal is assigned as the Primary Input Video Source.
4. Use the **Backup Input** field to determine which SDI input signal is assigned as the Backup Video Source.
5. Use the **Active Input** field to determine which SDI input signal is currently active and in use.

Specifying the Output During a Loss of Input

The card enables you to specify the output during a loss of input, or during a change of input format. The embedded audio will also go silent if passing from input to output (when another audio source is not selected).

To specify the output if the video input is lost

1. Display the **Config** interface as outlined in "**To access the AMX-8952 interfaces in DashBoard**".
2. Click **Configure Loss of Input**.

   The **Loss of Input dialog** opens.
3. Use the **Output Video on Loss of Input** menu to specify what to output when the card experiences a loss of input. Choose from the following:
   - **Matte Pattern** — A solid (single) color pattern will replace all of the output picture (but not the HANC and VANC). Refer to "**Specifying the Matte Color**" to specify the color for the matte pattern.
   - **Test Pattern** — A SMPTE bars test pattern will replace all of the output picture (but not the HANC and VANC).
   - **Freeze** — Enables the card to freeze and output the last good frame of video before the loss of input.
4. Close the **Loss of Input** dialog.

Specifying the Matte Color

Color selection is done by selecting a desired color from a list of options. The matte is a full raster signal.

To specify the matte color

1. Display the **Config** interface as outlined in "**To access the AMX-8952 interfaces in DashBoard**".
2. Click **Configure Output**.

   The **Output** dialog opens.

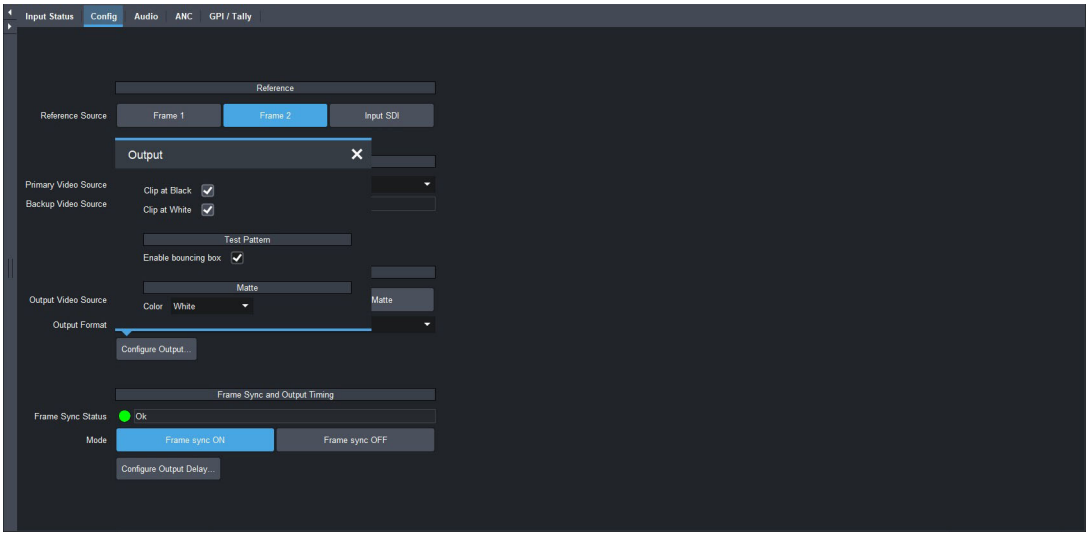

3. Use the **Matte Color** box to specify the color the Matte Pattern will display.
4. Close the **Output** dialog.

Configuring the Bouncing Box Test Feature

The **Bouncing Box** feature enables an overlay in the shape of a box that moves across the screen in a pre-determined pattern.

✶ If Freeze is selected for the Loss of Input Video setting and the input video signal is lost, the Bouncing Box test feature remains active (the box continues to move across the screen.)

To configure the bouncing box test feature

1. Display the **Config** interface as outlined in "**To access the AMX-8952 interfaces in DashBoard**".
2. Click **Configure Output**.

   The **Output** dialog opens.
3. Select the **Enable Bouncing Box** box to enable this feature.
4. Close the **Output** dialog.

Frame Sync Configuration

This chapter outlines how to enable the Frame Sync feature, and adjust the output timing.

Before You Begin

This feature requires that a license key for the AMX-8952-FS-LICENSE is installed for your card. Refer to "**Installing a License Key**" for details.

Enabling Frame Sync Mode

The AMX-8952 provides a frame sync mode to address asynchronous feeds and adjust timing by using the analog reference signal. This feature supports alignment of HD and UHD sources with adjustable timing offset, and enables you to align incoming remote feeds and venue cameras, utilize non-genlocked and asynchronous sources, and solve timing challenges within your facility.

✶ If a valid reference is selected, and then removed, the card will remain in Frame Sync mode but will flywheel. This means that the card will be dropping or repeating the display of some video input frames as necessary to keep the input to output delay within the specified range of F to F+1 frames delay. The frame drop/repeat occurs whenever the video input frame start point crosses over the video output frame start point. The card has built-in hysteresis to avoid visible artifacts if the input and output timing alignment oscillates around the drop/repeat cross-over point.

To enable frame sync mode

1. Ensure the following criteria are met before enabling Frame Sync mode:
   - cable your reference source as outlined in the user guide for your openGear frame.
   - the reference source for the AMX-8952 is set to Frame 1 or Frame 2. Refer to "**Specifying a Global Analog Reference Source**".
   - the reference signal is detected and valid. Refer to "**Monitoring the Reference Signal via DashBoard**".
2. Display the **AMX-8952** interface as outlined in "**To access the AMX-8952 interfaces in DashBoard**".
3. Select the **Config** tab.
4. Locate the **Frame Sync and Output Timing** area of the tab.

✶ If the options in the Frame Sync and Output Timing area are read-only and the Frame Sync Status field reports "`Unlicensed`" the AMX-8952-FS-LICENSE is not installed. Refer to "**Installing a License Key**" for details on installing a licensed feature.

5. In the **Mode** area, click **Frame Sync ON**.

Adjusting the Output Timing

The card is suited to solve system timing problems where the difference in delay is constant between two paths. An example of this would be a situation where a downstream switcher needs to have clean switches between the output of a production switcher and some of the same input sources fed to the production switcher. By default, 1 frame of delay is added to help correct badly missed switches, signal drops, or similar issues. Note that the **Input Timing** field of the **Status** tab reports the input video timing with respect to the selected analog reference signal.

✶ The audio delay will track with the video delay. Refer to "**Proc Amps for Embedded Audio**" and "**Using the Audio Proc**" for details.

The available delay values depends on the video format. Refer to **Table 7** for the range of available video delay values.

Table 7 Video Delay Ranges

Card Format	Horizontal Delay (pixels)	Vertical Delay (lines)	Frame Delay (frames)
HD Formats			
720p 50Hz	0-1979	0-749	1-220
720p 59.94Hz	0-1649	0-749	1-269
1080i 50Hz	0-2639	0-1124	1-114
1080i 59.94Hz	0-2199	0-1124	1-139
1080pSF 23.98Hz	0-2749	0-1124	1-110
1080pSF 24Hz	0-2749	0-1124	1-110
1080p 23.98Hz	0-2749	0-1124	1-110
1080p 24Hz	0-2749	0-1124	1-110
1080p 25Hz	0-2639	0-1124	1-114
1080p 29.97Hz	0-2199	0-1124	1-139
1080p 30Hz	0-2199	0-1124	1-139
1080p 50Hz	0-2639	0-1124	1-114
1080p 59.94Hz	0-2199	0-1124	1-139
1080p 60Hz	0-2199	0-1124	1-139
UHD Formats[a]			
2160p 23.98Hz	0-5499	0-2249	1-26
2160p 24Hz	0-5499	0-2249	1-26
2160p 25Hz	0-5279	0-2249	1-27
2160p 29.97Hz	0-4399	0-2249	1-33
2160p 30Hz	0-4399	0-2249	1-33
2160p 50Hz	0-5279	0-2249	1-27
2160p 59.94Hz	0-4399	0-2249	1-33

a. Requires the AMX-8952-UHD-LICENSE. Refer to "**Installing a License Key**" for details.

To adjust the timing

1. Display the **AMX-8952** interface as outlined in "**To access the AMX-8952 interfaces in DashBoard**".
2. Select the **Config** tab.

✶ The Delay sliders affect all outputs.

3. Locate the **Frame Sync and Output Timing** area of the tab.
4. Click **Configure Output Delay**.

   The **Output Delay** dialog opens.

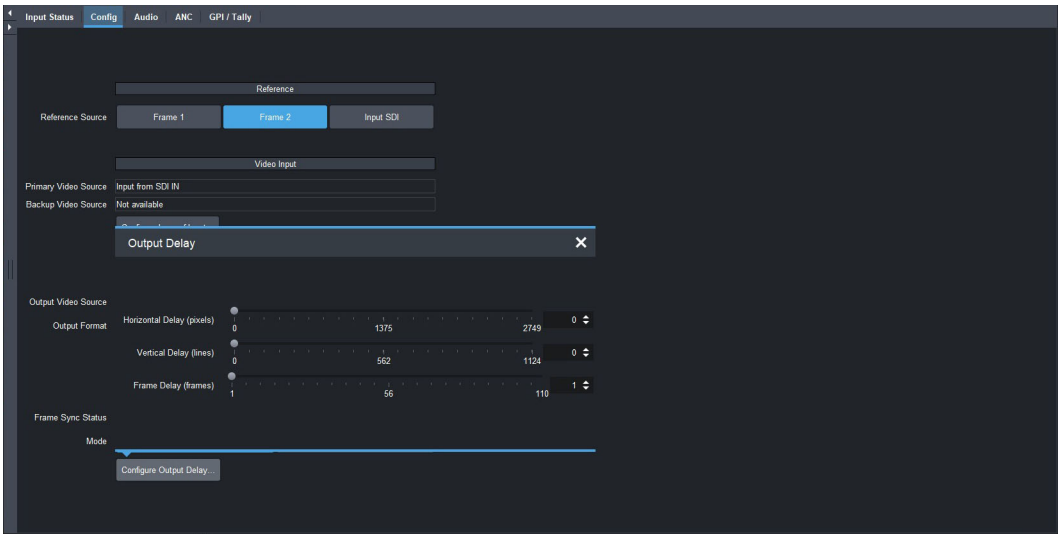

5. Use the **Horizontal Delay** field to specify the horizontal delay, relative to the selected reference. Adjustments are made in pixel increments.
6. Use the **Vertical Delay** field to specify the vertical delay, relative to the selected reference. Adjustments are made in line increments.
7. Use the **Frame Delay** field to specify the delay in number of frames. Frame delay adjustments are made in full frame increments.
8. Close the **Output Delay** dialog.

Embedded Audio Setup

The AMX-8952 includes Processing Amplifiers (Proc Amps) for the audio inputs on the card.

Sample Rate Conversion

Integrated sample rate converters can convert audio sample rates of up to 192kHz on the SDI IN BNC. The sample rate converters will convert the audio to the video reference rate.

To enable sample rate conversion on the AMX-8952

1. Display the **AMX-8952** interface as outlined in "**To access the AMX-8952 interfaces in DashBoard**".
2. Select the **Audio** tab.

   The **Embedded** sub-tab is automatically selected.
3. Select the **Sample Rate Conversion** box.

Mapping the Embedded Audio Channels

The embedded output channels are configured per processed input to allow different audio mapping that will track the currently processed input.

To map a channel

1. Display the **AMX-8952** interface as outlined in "**To access the AMX-8952 interfaces in DashBoard**".
2. Select the **Audio** tab.

   The **Embedded** sub-tab is automatically selected.
3. From the associated **Audio Source** menu, select an audio source.

   In the example below, the user is assigning the source for Channel 1 on an AMX-8952-B.

✶ If the selected source is not present on the input video, silence is embedded.

✶ Channel status bits are only passed when a left/right pair are not separated. Otherwise, a standard channel status will be inserted. When channel status is passed, it may not reflect a change between 20bit and 24bit.

To insert test tones

1. Display the **AMX-8952** interface as outlined in "**To access the AMX-8952 interfaces in DashBoard**".
2. Select the **Audio** tab.

   The **Embedded** sub-tab is automatically selected.
3. From the associated **Audio Source** menu, select a test tone.

   In the example below, the user is assigning a 1kHz test tone to Channel 4 on a AMX-8952-B.

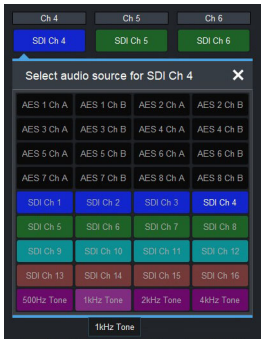

To mute a specific channel

- Click **Mute**.

Proc Amps for Embedded Audio

Proc Amp adjustments are applied in the following order:

1. **Sum** — This option enables both channels to carry the average of the two input channels ((A+B)/2). When the input is summed, the original signals are no longer available for output. This option only operates with AES input pairs.
2. **Delay** — This option enables you to adjust the delay of the audio channel. If you have enabled the Delay Lock feature, changing the delay value for one channel automatically changes the value for the other channel.
3. **Gain** — This option provides a +/- 20dB gain range in 1dB increments. If you have enabled the Gain Lock feature, changing the gain value for one channel automatically changes the value for the other channel.
4. **Invert** — This option enables you to invert the polarity of the audio signal for the selected channel.

Processing the Embedded Audio Input

✶ When passing non-PCM data (e.g. Dolby E®), ensure that input and output are synchronous and all audio modifying settings (such as SRC, gain, and invert) are disabled or set to zero (0).

To set up processing of the embedded audio input

1. Display the **AMX-8952** interface as outlined in "**To access the AMX-8952 interfaces in DashBoard**".
2. Select the **Audio** tab.

   The **Embedded Audio** sub-tab is automatically selected.
3. To enable the SRC of the embedded audio, select the **Sample Rate Conversion** box.

4. To apply a gain to a channel, use the associated **Ch #** slider to select a value between -20dB and 20dB. Repeat for each channel you wish to configure.
5. To invert a channel, select the associated **Ch # Invert** box.

AES Setup

The AMX-8952 includes Processing Amplifiers (Proc Amps) for the audio inputs on the card.

Mapping the AES Inputs and Outputs

Before proceeding, ensure that you have made a note of the AES connections on your rear module. This information is required when assigning a function to each AES signal.

For More Information on...

- the cabling designations for your rear module, refer to "**Supported Rear Modules**".

Mapping the AES Signals

The AMX-8952 enables you to configure the AES signals independently as inputs, or outputs.

To specify the AES configuration

1. Display the **Global** interface as outlined in "**To access the AMX-8952 interfaces in DashBoard**".
2. Select the **Setup** tab.
3. Locate the **AES IO Mapping** area of the tab.

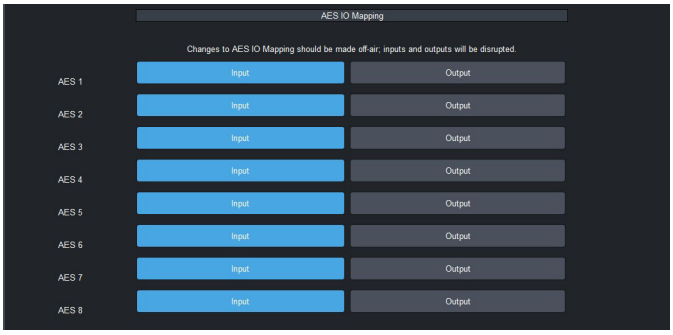

4. Locate the row for the AES signal you wish to configure.
5. Select one of the following:
   - **Input** — assigns the AES signal as an input. The associated AES connector on the rear module will receive discrete audio from an upstream source. This is the default for all AES signals.
   - **Output** — assigns the AES signal as an output. The associated AES connector on the rear module will transmit discrete audio to the connected external device.
6. Repeat steps 4 and 5 for each AES signal you wish to map.

Mapping the AES Channels

This section briefly summarizes how to map the AES channels. You can choose to use the default audio channel map or assign the channels as required by your system.

To configure the AES pairs

1. Display the **AMX-8952** interface as outlined in outlined in "**To access the AMX-8952 interfaces in DashBoard**".
2. Select **Audio** > **AES**.
3. Locate the column for the AES (Group) pair you wish to configure.

4. In the **Audio Source** row, select the channel of the AES pair to configure.

   The **Select Audio Source for AES Channel** dialog opens. In the example below, the user selected Channel 2 of AES (Group) 1.

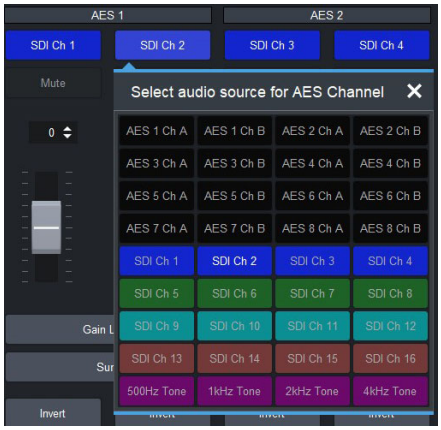

5. Select a signal to assign it to the channel. Choose from the following:
   - AES# Ch # — Assigns the specified channel of the specified AES signal.
   - SDI Ch # — Assigns the specified channel from the SDI IN signal.
   - #Hz Tone — Assigns the specified test tone.

   In the example above, the user assigns Channel 2 from AES 2 to the channel selected in step 4.
6. Close the **Select Audio Source for AES Channel** dialog.
7. Repeat the procedure for each channel you wish to configure.

Using the Audio Proc

Audio Proc Amp adjustments are applied in the following order:

1. **Sum** — This option enables both channels to carry the average of the two input channels ((A+B)/2). When the input is summed, the original signals are no longer available for output. This option only operates with AES input pairs.
2. **Delay** — This option enables you to adjust the delay of the audio channel. If you have enabled the Delay Lock feature, changing the delay value for one channel automatically changes the value for the other channel.
3. **Gain** — This option provides a +/- 20dB gain range in 1dB increments. If you have enabled the Gain Lock feature, changing the gain value for one channel automatically changes the value for the other channel.
4. **Invert** — This option enables you to invert the polarity of the audio signal for the selected channel.

To set up processing of the AES audio input

1. Display the **AMX-8952** interface as outlined in "**To access the AMX-8952 interfaces in DashBoard**".
2. Select **Audio** > **AES**.

3. To mute a channel, click the associated **Mute** button.
4. To apply a gain to a channel, use the associated **Gain Ch #** slider to select a value between -20dB and 20dB. Repeat for each channel you wish to configure.

✶ Click **Gain Lock** to change the gain value for one channel and automatically change the value for the other channel of the AES pair.

5. To sum the input ((A+B)/2) of the AES pair, click the associated **Sum** button.
6. To invert a channel, select the associated **Ch # Invert** box.
7. To set the delay for a channel of an AES pair, use the associated **Delay Offset** slider to specify a value between 0ms and 500ms.

Analog Audio Setup

The AMX-8952-C includes Processing Amplifiers (Proc Amps) for the audio inputs on the card.

Mapping the Analog Inputs and Outputs

Before proceeding, ensure that you have made a note of the analog connections on your rear module. This information is required when assigning a function to each analog signal.

For More Information on...

- the cabling designations for your rear module, refer to "**Supported Rear Modules**".

Mapping the Analog Signals

The AMX-8952-C enables you to configure the analog signals independently as inputs, or outputs.

To specify the analog configuration

1. Display the **Global** interface as outlined in "**To access the AMX-8952 interfaces in DashBoard**".
2. Select the **Setup** tab.
3. Locate the **Analog IO Mapping** area of the tab.

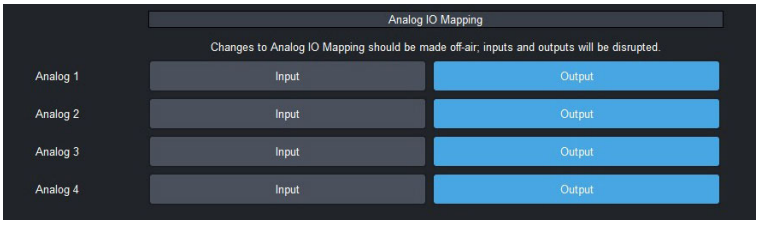

4. Locate the row for the analog signal you wish to configure.
5. Select one of the following:
   - **Input** — assigns the analog signal as an input. The associated ANLG connector on the rear module will receive audio from an upstream source. This is the default for all analog signals.
   - **Output** — assigns the analog signal as an output. The associated ANLG connector on the rear module will transmit audio to the connected external device.
6. Repeat steps 4 and 5 for each analog signal you wish to map.

Mapping the Analog Channels

This section briefly summarizes how to map the analog channels. You can choose to use the default audio channel map or assign the channels as required by your system.

To configure the analog pairs

1. Display the **AMX-8952** interface as outlined in outlined in "**To access the AMX-8952 interfaces in DashBoard**".
2. Select **Audio** > **Analog**.
3. Locate the column for the analog (Group) pair you wish to configure.
4. In the **Audio Source** row, select the channel of the analog pair to configure.

The **Select Audio Source for Analog Channel** dialog opens. In the example below, the user selected Analog 2 Ch A.

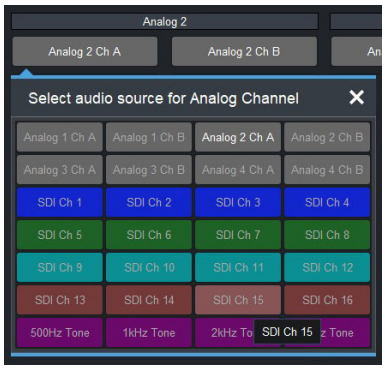

5. Select a signal to assign it to the channel. Choose from the following:
   - Analog # Ch # — Assigns the specified channel of the specified analog signal.
   - SDI Ch # — Assigns the specified channel from the SDI IN signal.
   - #Hz Tone — Assigns the specified test tone.

   In the example above, the user assigns SDI Ch 15 to the channel selected in step 4.
6. Close the **Select Audio Source for Analog Channel** dialog.
7. Repeat the procedure for each channel you wish to configure.

Using the Audio Proc

Audio Proc Amp adjustments are applied in the following order:

1. **Sum** — This option enables both channels to carry the average of the two input channels ((A+B)/2). When the input is summed, the original signals are no longer available for output. This option only operates with analog input pairs.
2. **Delay** — This option enables you to adjust the delay of the audio channel. If you have enabled the Delay Lock feature, changing the delay value for one channel automatically changes the value for the other channel.
3. **Gain** — This option provides a +/- 20dB gain range in 1dB increments. If you have enabled the Gain Lock feature, changing the gain value for one channel automatically changes the value for the other channel.
4. **Invert** — This option enables you to invert the polarity of the audio signal for the selected channel.

To set up processing of the analog audio input

1. Display the **AMX-8952** interface as outlined in "**To access the AMX-8952 interfaces in DashBoard**".
2. Select **Audio** > **Analog**.

3. To mute a channel, click the associated **Mute** button.
4. To apply a gain to a channel, use the associated **Gain Ch #** slider to select a value between -20dB and 20dB. Repeat for each channel you wish to configure.

✶ Click **Gain Lock** to change the gain value for one channel and automatically change the value for the other channel of the analog pair.

5. To sum the input ((A+B)/2) of the analog pair, click the associated **Sum** button.
6. To invert a channel, select the associated **Ch # Invert** box.
7. To set the delay for a channel of an analog pair, use the associated **Delay Offset** slider to specify a value between 0ms and 500ms.

Ancillary Data

Ancillary Data (ANC) is the non-video data that can be embedded within the SDI signal, such as audio, audio metadata, timecode, closed caption data, AFD, and payload identification. This chapter provides an overview of how the AMX-8952 manages ANC data.

Overview

There are two areas in which ancillary data may be found:

- **HANC** — ANC packets that are found in the horizontal blanking region.
- **VANC** — ANC packets that are found in the vertical blanking region.

This section outlines how to view incoming status in the **Input Status** tab and configure the AMX-8952 to manage HANC and VANC data using the options in the **ANC** tab of DashBoard.

HANC and VANC Status

The **Input Status** tab in DashBoard provides HANC and VANC status details:

- **Embedded Audio** — These fields indicate the information extracted from the channel status, such as PCM/Non-PCM, 20bit or 24bit. When this field is blank, the packet for the specified group is absent.
- **ST 352 Upstream** — This read-only field reports whether the 352M data is detected on the input, and displays the four bytes.
- **AFD**, **Closed Captioning**, **Timecode**, **Compressed Audio Metadata**, **SCTE-104**, **Other** — These fields indicate the status of the specified packet, such as whether it is detected or not on the input. Each message includes the following information:
  - **Field** # — indicates which field the timecode was detected in (e.g. Field 1 (Odd))
  - **Type** — indicates the type of timecode (e.g. ATC-VITC1)
  - **Line #** — indicates the specific line the timecode data was detected in (e.g. 16)
  - **Location** — indicates timecode is in the HANC (H), or VANC (<blank>)
  - **Channel** — indicates timecode is in the luma (L), or chroma (C) channel

CEA-708/CEA-608 Closed Captioning

The AMX-8952 series card:

- ensures continuity of CEA-608 data and/or DTVCC data during frame drop or repeat.
- receives the packet, and passes it through on the specific line or deletes it as specified in the **Action** menu.
- monitors the CDP sequence number of incoming CEA-708 data to detect discontinuities in the DTVCC transport stream, and propagates any sequence-number discontinuity to the outgoing DTVCC data, to alert downstream equipment of the change.

✶ When disabled, closed captioning (packet and line 21) is not inserted.

CEA-608 and CEA-708 Captioning Priority

There are two supported types of closed captioning data: native CEA-708, and CEA-608 embedded in CEA-708. The order of preference for output CEA-708 data is as follows:

1. CEA-708
2. CEA-608 embedded in CEA-708

The order of preference for output CEA-608 data is as follows:

1. CEA-608 embedded in CEA-708
2. Null content

✶ CEA-708 is not down-converted to CEA-608.

Other Data Types

This section provides additional information on other data types that the AMX-8952 series manages.

Compressed Audio Metadata

Compressed Audio Metadata can be passed or deleted.

Timecode

The user can specify whether timecode is passed or deleted. When pass is enabled, the timecode will be inserted in the HANC (RP196) for all formats.

Other Packets

All remaining packets can be passed or deleted. When pass is enabled, the packets will be inserted in VANC on the specified line in the same order as they were received. If they do not fit on the specified line, they will continue on the next line. Approximately up to 250 packets, or 1500 bytes of data, can be passed this way.

Passing or Deleting ANC Data

For each packet type, the user can specify whether ancillary data is inserted or deleted in the output, and the insertion position.

To configure the card for specific ANC types

1. Display the **AMX-8952** interface as outlined in "**To access the AMX-8952 interfaces in DashBoard**".
2. Select the **ANC** tab.
3. For each packet, use the **Action** options to specify whether the card passes the ANC data unmodified or deletes the ANC data.

   In the following example, the user selected to pass all types of ANC data (each **Pass** button is lit blue on the interface).

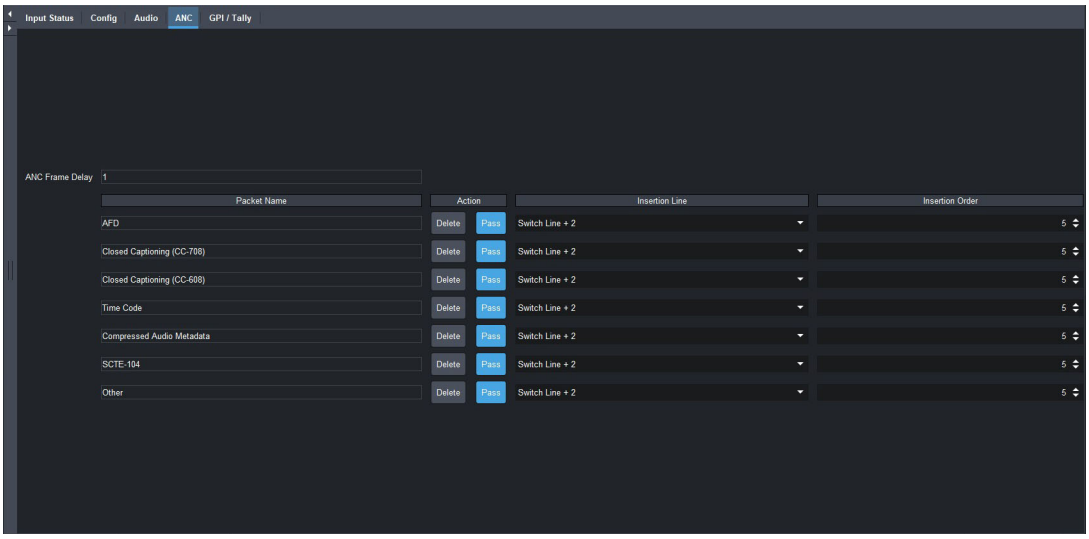

4. Use the **Insertion Line** menu to select a line to insert the specified ANC packet on. The default is 9 for each packet. Note that all packets are inserted in VANC, except for timecode in non-SD formats which are inserted in the HANC.

✶ If more than one packet is to be inserted in the same line, the packet with the lowest insertion order number will be inserted first.

5. Use the **Insertion Order** menu to define the hierarchy of the packets insertion.

✶ The lower the number, the higher priority the packet is given. For example, if the AFD packet is to be inserted before the Compressed Audio Metadata, set the AFD Insertion Order to 1, and the Compressed Audio Metadata to 2.

Configuring the GPI/Tallies

This chapter outlines how to configure each General Purpose Interface (GPI) independently on the AMX-8952.

GPI Communication Setup

When configured as a GPI, a port behaves as an input, and can be used to trigger actions. An example of a commonly used GPI input is the small, hand-held, trigger a weather forecaster uses to advance though the different backgrounds in the weather forecast. A push-button switch, or an ON-OFF switch, may be directly connected between the port and the adjacent ground pin. Alternatively, an external device may drive a low level. Minimum pulse duration is 1ms, anything shorter will be filtered out.

Typically, users will configure the GPI for Edge trigger. This means that the action is carried out either on the falling edge (button is pushed), or rising edge (button is released), depending on which Polarity is selected. Alternatively, users may configure the GPI for Level trigger. In this mode, the action is carried out on both the rising and falling edges, so there are effectively two states. The Polarity control can be used to invert the behavior. Regardless of the trigger type, GPI commands may be overridden by other command inputs such as serial protocols.

The **Edge** option enables the GPI to act as a latching trigger. Edge triggers are used when you want to toggle between settings. This option enables the GPI to execute a specific function.

- If configured for Falling Edge, the selected function is executed when the GPI input signal transitions from High to Low.
- If configured for Rising Edge, the selected function is executed when the GPI input signal transitions from Low to High.
- Edge triggered GPI signals are sampled once per frame and the associated function is executed only once per frame. The minimum pulse width is 1 millisecond.
- Typically, the edge triggered GPI is driven by external equipment that generates one pulse per event.

Level triggers are used when you want to assert a particular state for a setting.

- If configured for Active Low, the selected function is executed when the GPI input signal is driven Low.
- If configured for Active High, the selected function is executed when the GPI input signal is driven High.

Configuring a Port as a GPI

Each port can be configured independently from the others, allowing you to customize the function of each connection.

To configure a port as a GPI

1. Display the **AMX-8952** interface as outlined in "**To access the AMX-8952 interfaces in DashBoard**".
2. Select the **GPI/Tally** tab.

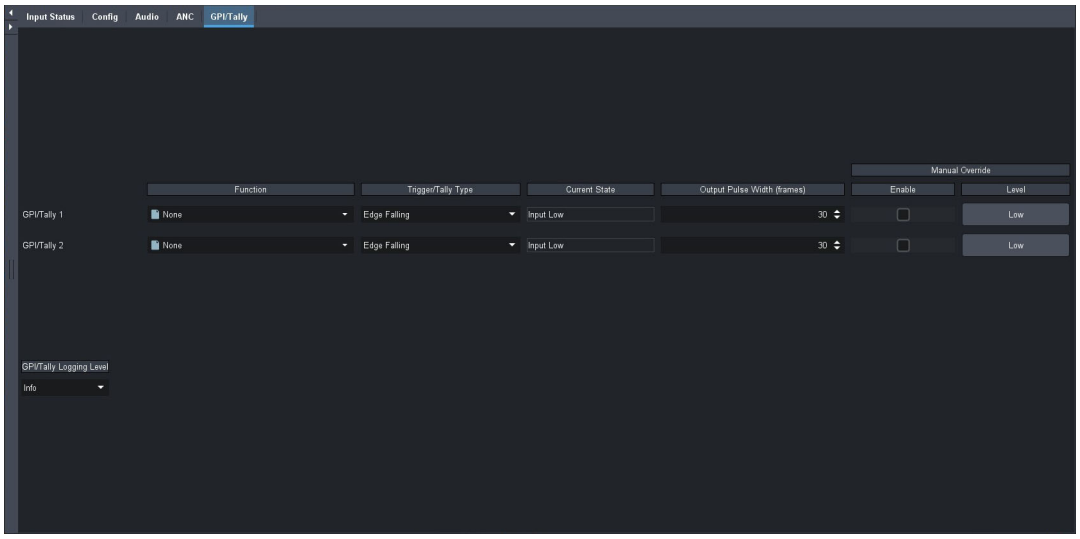

3. Use the **Function** menu to assign a transition event to a specific GPI port.
4. Use the **Trigger/Tally Type** menu to select a trigger and polarity for the GPI.
5. Use the **Manual Override** and **Level** options in conjunction to override a GPI.
   a. Select the **Manual Override** box for a GPI/Tally.
   b. Toggle the **Level** button.

Tally Communication Setup

When configured as a Tally, a port becomes an output, providing a status indicator. Typically this is used to indicate which input(s) are on-air at any given moment. Each tally output on the card can be configured to be active when an input is on air. They can be configured as Active High or Active Low. Edge triggered tallies generate a pulse to the configure polarity (high or low) for a duration of 30 frames or the duration of the event (whichever is shorter). The tally outputs defaults to a logical high level when inactive. When the tally becomes active, for example the signal is on-air, then the output is driven low.

To configure a port as a tally

1. Display the **AMX-8952** interface as outlined in "**To access the AMX-8952 interfaces in DashBoard**".
2. Select the **GPI/Tally** tab.
3. Use the **Function** menu to specify what will drive the tally output when the input is on-air.
4. Use the **Trigger/Tally Type** menu to select the polarity of the tally.
5. Use the **Manual Override** and **Level** options in conjunction to override a tally.
   a. Select the **Manual Override** box for a GPI/Tally.
   b. Toggle the **Level** button.

Upgrading the Software

The AMX-8952 can be upgraded in the field via DashBoard.

To upgrade the software on a card

1. Contact Ross Technical Support for the latest software version file.
2. Ensure the Ethernet cable is connected to the **Ethernet** port on the openGear frame.
3. From the **Tree View**, expand the node for the AMX-8952 you want to access.
4. Double-click the **Global** sub-node to display the interface in the right-half of DashBoard.
5. Select **Upload**, located near the bottom of the interface, to display the **Select file Upload** dialog.
6. Navigate to the ***.bin** file you want to upload.
7. Click **Open**.
8. If you are upgrading a single card:
   a. Click **Finish** to start the upgrade.
   b. Proceed to step 10.
9. If you are upgrading multiple cards:
   a. Click **Next >** to display the **Select Destination** menu. This menu provides a list of the compatible cards.
   b. Specify the card(s) to upload the file to by selecting the check box(es) for the cards you want to upload the file to.
   c. Verify the card(s) you want to upload the file to. The **Error/Warning** fields indicate any errors, such as incompatible software or card type mismatch.
   d. Click **Finish**.
10. Monitor the upgrade.
    - An **Upload Status** dialog enables you to monitor the upgrade process.
    - Notice that each card is listed in the dialog with a button. This button is replaced with a **Reboot** button once the software file is loaded to that card.

✶ Avoid clicking the individual Reboot buttons until all cards have successfully completed the file upload process and the OK button, located in the bottom right corner of the dialog, is enabled.

- Click **OK** to reboot all the cards listed in the **Uploading to Selected Devices** dialog.
- The **Reboot Confirm** dialog displays, indicating the number of cards that will reboot. Click **Yes** to continue the upgrade process. Note that clicking **Cancel** or **No** returns you to the **Uploading to Selected Devices** dialog without rebooting the card(s).
- The card(s) are temporarily taken off-line during the reboot process. The process is complete once the status indicators for the **Card State** and **Connection** return to their previous status.

DashBoard Menus

This chapter briefly summarize the menus, items, and parameters available from the DashBoard Control System for the AMX-8952. Parameters marked with an asterisk (*) are the factory default values.

✶ Wait 30 seconds after the last setting change to ensure all changes are saved to the non-volatile memory of the card.

Global Interface

The Global interface is accessed by double-clicking the Global sub-node in the AMX-8952 tree. There are two distinct areas in the Global interface: Status (on the left), and Configuration (on the right).

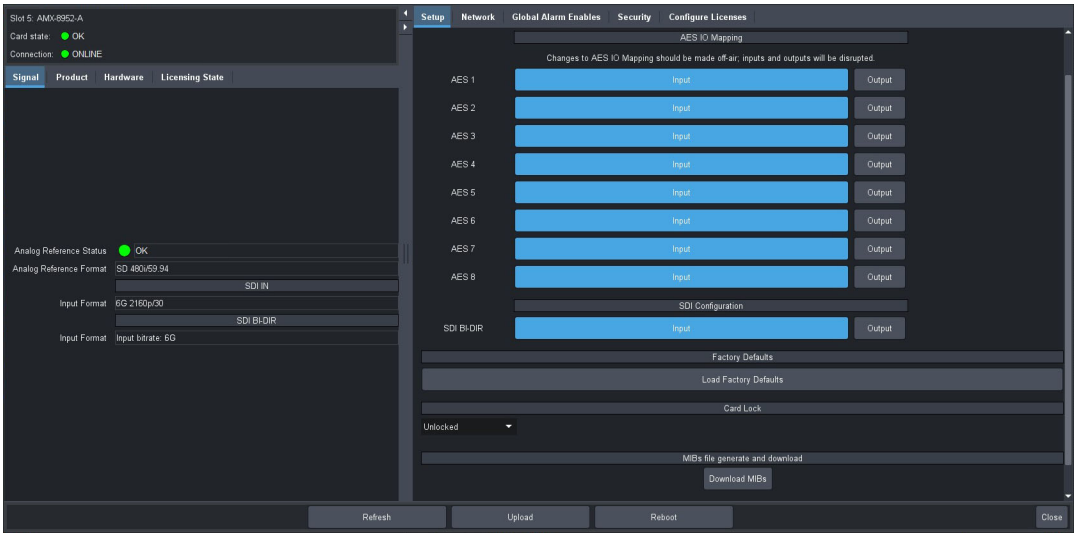

Figure 1 Example of the Global Interface — AMX-8952-A

Signal Tab

Table 1 summarizes the read-only fields displayed in the **Signal** tab.

Table 1 Signal Tab

Item	Parameters	Description
Analog Reference Status	OK (Green)	A valid signal is detected from the reference source device
	Alarm suppressed (Green)	There are reference errors detected but the Global Alarm Enables > Reference Error option is disabled (box is not selected)
	Unsupported	An unsupported signal is detected from the reference source device
	Unlocked (Red)	A valid or present reference signal is not detected by the card
Analog Reference Format	#	Reports the video format detected on the input reference signal as defined by the Setup > Analog Reference Source menu.
SDI IN		

Table 1 Signal Tab

Item	Parameters	Description
Input Format	#	A valid signal is detected on the active SDI input, the format is supported, and the selected reference signal is supported and compatible
	N/A	An invalid SDI signal is detected on the active SDI input
SDI BI-DIR		
Input Format	#	A valid SDI signal is detected on the SDI BI-DIR BNC, the format is supported, and the selected reference signal is supported and compatible
	Input bitrate: 12G	A 12G signal is detected on the SDI BI-DIR BNC
	N/A	An invalid SDI signal is detected on the SDI BI-DIR BNC

Product Tab

Table 2 summarizes the read-only information displayed in the Product area.

Table 2 Product Tab

Item	Parameters	Description
Product	AMX-8952-#	
Supplier	Ross Video Ltd.	
Board Rev	#	Indicates the hardware version
Serial Number	#	Indicates the serial number of the card
Rear Module	#	Indicates the rear module the card is installed in
Rear Module Status	OK (Green)	A supported rear module is installed with the card
	Alarm suppressed (Green)	An unsupported rear module is installed by the Global Alarm Enables > Incompat Rear Module option is disabled (box is not selected)
	Incomp I/O Module (Red)	Card is connected to an unsupported rear module
Software Rev	#.#-#	Indicates the software version running on the card
Firmware Rev	#.#	Indicates the firmware version running on the card
CPLD Rev	#.#	Indicates the complex programmable logic device version of the AMX-8952
Daughter Card		

Table 2 Product Tab

Item	Parameters	Description
Type	#	Indicates the daughter card model installed on the card
Variant	#	
Issue	#	Indicates the hardware version of the daughter card

Hardware Tab

Table 3 summarizes the read-only information displayed in the Hardware tab.

Table 3 Hardware Tab

Item	Parameters	Description
Hardware Status	OK (Green)	Fans are operating correctly; no errors are detected
	Alarm suppressed (Green)	There are fan errors detected but the Global Alarm Enables > Stalled Fan option is disabled (box is not selected)
	Critical Temperature (Red)	The FPGA temperature is 100°C (212°F) or above
	Fan Off/Stalled (Red)	The fan installed on the AMX-8952 is not operating correctly
Voltage (mV)	#	Measured input millivolts
Current (mA)	#	Current consumption in milliamperes
Power (W)	#	Power consumption in watts
FPGA Temp (C)	#C	Indicates the FPGA Core temperature where: • A green indicator displays when the temperature is less than 95°C. • A yellow indicator displays when the temperature is greater than or equal to 95°C. • A red indicator displays when the temperature is greater than or equal to 100°C (212°F). ✶ **If the temperature is greater than 100°C (212°F), the user must manually power down the card.**
AXI Bridge	#	The Advanced extensible interface bridge is running correctly on the AMX-8952. This information is for Ross Technical Support.
Fan Speed	#	Reports the speed (rpm) of the fan on the board

Table 3 Hardware Tab

Item	Parameters	Description
CPU Usage	x.xx / y.yy / z.zz	Displays the CPU Load average where: • x.xx represents in the last minute • y.yy represents the last five minutes • z.zz represents the last fifteen minutes
RAM Available	# / # MB	CPU Memory Used / Total CPU Memory
SD Card Status	# of #GB used	Reports the amount of memory used on the Micro SD card

Licensing State Tab

Table 4 summarizes the read-only information displayed in the Licensing State tab.

Table 4 Licensing State Tab

Item	Parameters	Description
Base Product Type	AMX-8952	
Feature	AMX-8952-FS-LICENSE	Lists the available licensed features for this base product type
	AMX-8952-UHD-LICENSE	
License State	Unlicensed	The license key for the feature is not installed. Navigate to the Configure License tab to enable this feature
	Licensed	The license key for the AMX-8952+FRC feature was correctly enabled in the Configure License tab

Setup Tab

The Setup tab is the first tab in the Configuration pane of the Global interface.

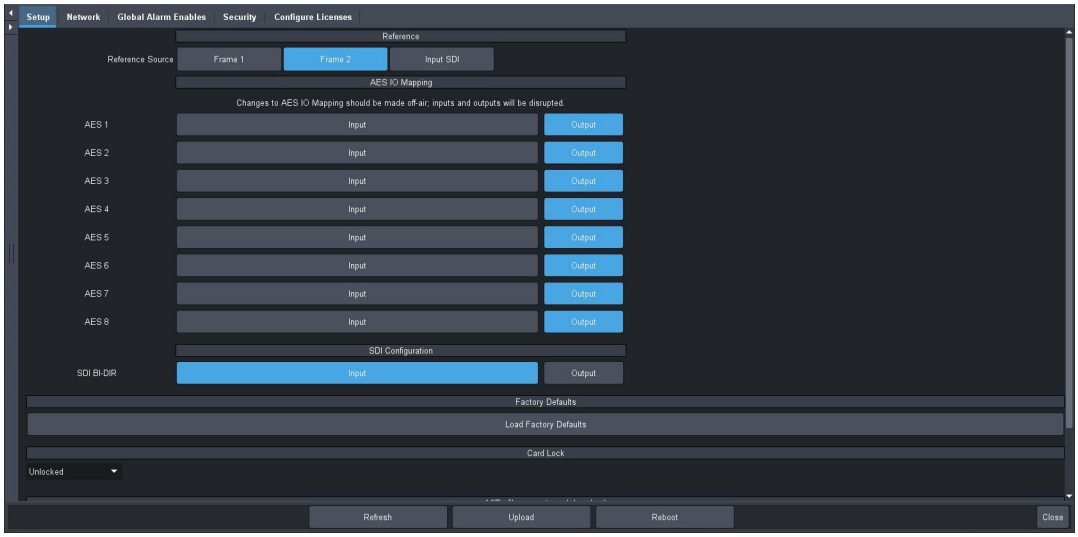

Figure 2 Global — Setup Tab for the AMX-8952-A

Table 5 summarizes the options displayed in the Setup tab.

Table 5 Setup Tab

Item	Parameters	Description
Reference		
Reference Source	Frame 1	Uses the reference signal connected to the **REF 1** BNC on the openGear frame
	Frame 2	Uses the reference signal connected to the **REF 2** BNC on the openGear frame
	Input SDI	Uses the video signal connected to the SDI IN port on the rear module
AES IO Mapping[a]		
AES #	Input	Assigns the AES port as an input
	Output	Assigns the AES port as an output
Analog IO Mapping[b]		
Analog #	Input	Assigns the ANLG port as an input
	Output	Assigns the ANLG port as an output
SDI Configuration		
SDI BI-DIR	Input	Assigns the SDI BI-DIR port (BNC 3) on the rear module as an input
	Output*	Assigns the SDI BI-DIR port (BNC 3) on the rear module as an output
Factory Defaults		
Load Factory Defaults	All editable parameters in DashBoard, except those in the Network tab, are reset to the factory default values	
Card Lock		
Unlocked*	All editable parameters in DashBoard can be modified by a user	
Locked	The DashBoard interface is locked. The editable parameters in DashBoard can no longer be modified by the user. To unlock the interface, select the box again.	
Generate and Download MIBs File		
Download MIBs	Downloads the Management Information Base (MIB) file that provides the SNMP controls for your card	

a. This area is only available when using the AMX-8952-A or AMX-8952-B.
b. This area is only available when using the AMX-8952-C.

Network Tab

Table 6 summarizes the menus and read-only fields displayed in the Network tab.

Table 6 Network

Item	Parameters	Description
Remote Logging		
Remote Logging	#.#.#.#	Specifies the IP Address for the external device that is logging the communication activity for the AMX-8952
Default Gateway		
Current (read-only)	#.#.#.#	Indicates the gateway for communications outside of the local area network (LAN)
Static Gateway	#.#.#.#	The Gateway for the AMX-8952 that the user manually assigned
openGear Chassis RJ-45		
Link Status (read-only)	OK (Green)	The AMX-8952 is communicating on the network via the Network Controller Card
	Invalid Subnet Mask (Yellow)	The Current Subnet Mask value is set incorrectly or is invalid within your network
	Apply/Cancel Changes (Yellow)	One or more setting on this tab was changed but the **Apply** button was not selected
	Link Down (Red)	The link for the Network Controller Card is invalid
Current IP Address (read-only)	#.#.#.#	Indicates the IP Address currently assigned to the AMX-8952 via the Network Controller Card
Current Subnet Mask (read-only)	#.#.#.#	Indicates the subnet mask for the AMX-8952
MAC Address (read-only)	#	Indicates the MAC Address currently assigned to the AMX-8952
Mode	Static	The user manually supplies the network settings for the AMX-8952
	DHCP*	Automates the assignment of network settings for the AMX-8952
Static IP Address	#	The IP Address for the AMX-8952 that the user manually assigned
Subnet Mask	#	The Subnet Mask for the AMX-8952 that the user manually assigned

Global Alarm Enables Tab

Table 7 summarizes the options displayed in the Global Alarm Enables tab.

Table 7 Global Alarm Enables Tab

Item	Parameters	Description
Rear Module Alarm		
Status (read-only)	OK (Green)	The rear module installed with the AMX-8952 is a supported model
	Alarm Suppressed (Green)	The Alarm Enable box is cleared. The status of the rear module will not be reported.
	Incompat Rear Module (Red)	The rear module installed with the AMX-8952 is not supported. Refer to "**Supported Rear Modules**".
Alarm Enable	Selected*	The Global > Product > Rear Module Status field reports when a rear module is not compatible with the card
	Cleared	Disables this alarm
Fan Alarm		
Fan Speed (read-only)	#	Reports the speed (rpm) of the fan on the board
Alarm Enable	Selected*	The AMX-8952 reports the detected speed of the fan installed on the board
	Cleared	Disables this alarm
Analog Reference Alarm		
Reference Format (read-only)	OK (Green)	Indicates the detected reference format is supported
	Alarm Suppressed (Green)	The Alarm Enable box is cleared. The status of the reference signal will not be reported.
	Unlocked (Red)	A reference signal is detected, but the card is not locked to it
	Unsupported (Red)	A reference signal is detected, but the format is not supported by the AMX-8952
	Incompatible (Red)	A reference signal is detected but the format is incompatible with the current output mode of the card
Alarm Enable	Selected*	The Global > Signal > Analog Reference Status field reports when there is a loss of reference signal
	Cleared	Disables this alarm
SDI Input Alarms		
Input # Status (read-only)	This field duplicates the information reported in the Input Status field as outlined in **Table 10**.	

Table 7 Global Alarm Enables Tab

Item	Parameters	Description
Alarm Enable	Selected*	AMX-8952 reports a loss of the specified input or if the format is incompatible for the specified input
	Cleared	Disables this alarm

Security Tab

Table 8 summarizes the options displayed in the Security tab.

Table 8 Security Tab

Item	Parameters	Description
Security Configuration		
SSH Login	Disable*	Disables the ability for a user to log onto the AMX-8952 via a SSH server
	Enable	The AMX-8952 can be accessed via a secure channel by an SSH server. This should only be selected if directed to do so by Ross Video Technical Support.

Configure Licenses Tab

Table 9 summarizes the read-only information displayed in the Configure Licenses tab.

Table 9 Configure Licenses Tab

Item	Parameters	Description
Base Product Type	AMX-8952	
Feature	<text>	Specifies the license(s) available for your card
Request Code	#	This character string is used to obtain a license key
Key	#	Specifies the license key that was provided for the specified feature

AMX-8952 Interfaces

Each AMX-8952 interface provides options for configuring and monitoring the video and audio signals for your AMX-8952 card. The menus and tabs that are available depend on the specific card model you are using.

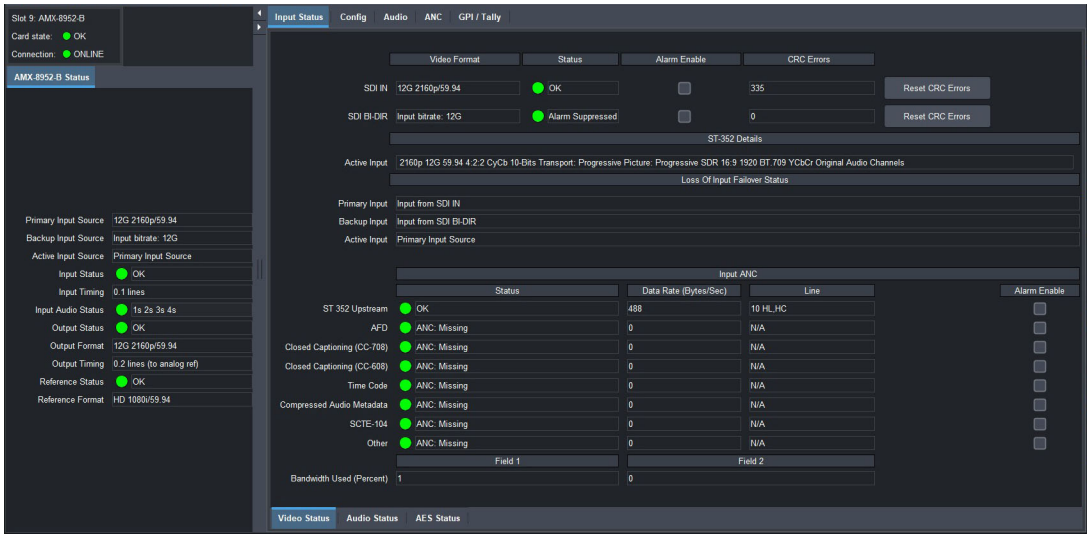

Figure 3 Example of an AMX-8952-B Interface in DashBoard

AMX-8952 Status Tab

Table 10 summarizes the read-only fields displayed in the Status tab.

Table 10 AMX-8952-# — Status

Item	Parameters	Description
Primary Input Source	#	Indicates the video format detected on the active SDI input signal
Backup Input Source	#	Indicates the video format (or bitrate) detected on the backup SDI input signal
Active Input Source	Primary Input Source	Indicates that the Primary Input Source is the active input signal for the card. The signal is assigned via the Config > Primary Video Source menu.
	Backup Input Source	Indicates that the Backup Input Source is the active input signal for the card. The signal is assigned via the Config > Backup Video Source menu.

Table 10 AMX-8952-# — Status

Item	Parameters	Description
Input Status	OK (Green)	No errors are detected on the video signal of the specific SDI IN BNC
	Alarm suppressed (Green)	The AMX-8952 is not monitoring the input signal(s)
	Unsupported Format (Yellow)	An input signal is detected on the specific SDI IN BNC but the video is not supported by the card
	Incompatible Video (Yellow)	An input signal is detected on the specific SDI IN BNC but its format is not compatible with the output video format
	Not time to Ref (Yellow)	An input signal is detected on the specific SDI IN BNC but the detected reference signal is incompatible with this input signal
	No Signal (Red)	Indicates one of the following issues is occurring: • the SDI input signal is not detected • the system frame rate does not match the input frame rate
Input Timing	Lines: #, Pixels: #	Indicates the timing offset between the video input signal and the reference signal. The unit of measure is lines and pixels with respect to the input video format.
Input Audio Status	#a #x #s #s	Indicates the input audio status where: • # represents the audio group (e.g. 1, 2) • a represents an async audio group • x represents a missing audio group • s represents a sync audio
Output Status	OK (Green)	Indicates that no errors are detected on the video signal of the SDI OUT BNC
	Alarm Suppressed (Green)	The card is not monitoring the output signal(s)
	Test Pattern: Color (Green)	The current output of the card is a SMPTE test pattern
	Matte Pattern (Green)	The current output of the card is set to a solid color as defined by the Matte Pattern
	No Lock (Red)	A reference signal is detected, but the card output is not locked to it
Output Format	#	Indicates the output video format
	Invalid Selection	The output video format is not supported or does not match the reference format
Output Timing	# lines (to x)	Indicates the timing offset between the video output signal and the reference signal where x represents the reference signal specified in the Config > Reference Source menu

Table 10 AMX-8952-# — Status

Item	Parameters	Description
Reference Status	OK (Green)	A valid signal is detected from the reference source device
	Alarm suppressed (Green)	There are reference errors detected but the Global Alarm Enables > Reference Error option is disabled (box is not selected)
	Incompatible (Red)	The reference signal is not compatible to the detected input signal. Refer to **Table 6** for a list of compatible signals.
	Unsupported (Red)	An unsupported signal is detected from the reference source device
	Unlocked (Red)	A valid or present reference signal is not detected by the card
Reference Format	#	Reports the video format detected on the input reference signal as defined by the Setup > Analog Reference Source menu

Input Status Tab

The Input Status tab provides a sub-tab to monitor each type of signal the AMX-8952 is currently ingesting.

Video Status

Table 11 summarizes the read-only fields displayed in the Video Status tab.

Table 11 Input Status — Video Status

Item	Parameters	Description
SDI IN, SDI BI-DIR[a]		
Video Format	#	Indicates the detected input format/bitrate
Status (read-only)	Duplicates the information reported in **Table 10**	
Alarm Enable	Selected*	An alarm is reported during a loss of the specified input or the format is incompatible for the specified input
	Cleared	Disables the alarm
CRC Errors	#	Displays the count of the CRC errors on the video input. This counter is reset on loss of video, or by user request. The counter is non-latching, and the count can roll over the counter
	Reset	Resets the CRC Errors field
ST-352 Details		
Active Input	#	352M data is detected and the 4 bytes are displayed
Loss of Input Failover Status		

Table 11 Input Status — Video Status

Item	Parameters	Description
Primary Input	Input from SDI #	Reports the SDI signal assigned as the primary SDI input. This is set in the Config tab.
Backup Input	Input from SDI #	Reports the SDI signal assigned as the backup SDI input. This is set in the Config tab.
Active Input	#	Reports which SDI signal (Primary or Backup) is the currently active input signal
Input ANC		
Status (read-only)	ANC: Present (Green)	Expected incoming ANC data: present
	ANC: Exceeded Bandwidth	Captured VANC services exceeded bandwidth
	ANC: Missing	Expected incoming ANC data: not present
	ANC: Present in Luma and Chroma	Incoming data was found on both LUMA and CHROMA channels
	ANC: Unexpected: Field #	Receiving ANC data from wrong field
	ANC: Unexpected: LUMA	Receiving ANC data from wrong channel
	ANC: Unexpected: CHROMA	Receiving ANC data from wrong channel
	ANC: Line Out of Range	Receiving data from wrong line
	ANC: Too Many Packets in Frame	
	ANC: Not Assigned	The required output port has not been assigned
	ANC: Not Connected	The output has been assigned, but is not connected
	ANC: Overflow	Exceeded output bandwidth. Lost data.
	ANC: CRC Error	CRC error found in incoming ANC data: some protocols only
	ANC: Parse Error	Incoming data does not match expected protocol
Status (read-only)	ANC: Invalid Length	The length of incoming ANC packet is incorrect for service
Data Rate (Bytes/Sec)	#	Reports the upstream data transfer rate; the number of bytes received in the last field
Line	# VL, VC	Reports the upstream data insertion location
	N/A	
Alarm Enable	Selected*	The AMX-8952 monitors the Input ANC status and updates the Status field accordingly
	Cleared	Disables this alarm

Table 11 Input Status — Video Status

Item	Parameters	Description
Field #		
Bandwidth Used (Percent)	#	The overall bandwidth percentile including buffer overflow state, of all incoming ANC services on the SDI input

a. The SDI BI-DIR fields display when the SDI BI-DIR is set to Input on the Global > Setup tab.

Audio Status

Table 12 summarizes the read-only fields displayed in the Audio Status tab.

Table 12 Input Status — Audio Status

Item	Parameters	Description
Embedded Audio Status - Group #		
Channel # (read-only)	PCM	The channel is PCM audio
	Non-PCM	The channel is non-PCM audio
	Absent	The audio channel is not detected or invalid
Async Alarm	Selected*	An alarm is reported when the embedded audio is incompatible
	Cleared	Disables the alarm
Presence Alarm	Selected*	An alarm is reported when the embedded audio is not present
	Cleared	Disables the alarm

AES Status

Table 13 summarizes the options, and read-only fields displayed in the AES Status tab. This tab displays when using an AMX-8952-A or AMX-8952-B.

Table 13 Input Status — AES Status

Item	Parameters	Description
AES # Input[a]		
Sample Rate Conversion	Selected	SRC is used on the input of the specified AES signal
	Cleared	SRC is not used on the input of the specified AES signal. Select this option when using non-PCM audio data.
Ch # Status (read-only)	PCM (Green)	Displays the status of the specified channel input
	PCM-silent (Green)	
	Non-PCM (Green)	
	No Input (Red)	
	Async[b] (Red)	

Table 13 Input Status — AES Status

Item	Parameters	Description
Word Length (read-only)	#bit	Reports the number of bits of audio
Sample Rate (read-only)	#kHz	Reports the sample rate of the AES input
Emphasis (read-only)	Yes	The incoming AES signal is indicating 50/15 or CCiTT J.17 emphasis
	No	The incoming AES signal is indicating no emphasis or the emphasis is not indicated
Presence Alarm[c]	Selected*	The Input Status > AES Status tab reports when the specified AES input is not detected
	Cleared	Disables the alarm.
Async Alarm[c]	Selected	The AES source is either asynchronous to the input video, or is not a 48kHz rate
	Cleared	Disables the alarm. The AES input is not monitored.

a. The fields on this tab are disabled if the AES signal is configured as an output.
b. If the Sample Rate Conversion is enabled, an Async AES signal is processed to be PCM and indicated as such.
c. This option is disabled if the AES signal is configured for loopback.

Analog Status

Table 13 summarizes the read-only fields displayed in the Analog Status tab. This tab displays when using an AMX-8952-C.

Table 14 Input Status — Analog Status

Item	Parameters	Description
Analog # Input[a]		
Channel # (dB) (read-only)	#	Reports the audio gain applied to the channel

a. The fields on this tab are disabled if the analog signal is configured as an output.

Config Tab

Table 15 summarizes the menus displayed in the Config tab.

Table 15 Config Tab

Item	Parameters	Description
Video Input		
Primary Video Source	Input from SDI IN*	Assigns SDI IN (BNC 1) as the primary input signal when the Loss of Input Failover mode is enabled
	Input from SDI BI-DIR	Assigns SDI BI-DIR (BNC 3) as the primary input signal when Loss of Input Failover mode is enabled

Table 15 Config Tab

Item	Parameters	Description
Backup Video Source	Input from SDI	Assigns SDI IN (BNC 1) as the backup input signal when the Loss of Input Failover mode is enabled
	Input from SDI Bi-DIR*	Assigns SDI BI-DIR (BNC 3) as the backup input signal when the Loss of Input Failover mode is enabled
Configure Loss of Input		
Loss of Input Failover	ON	• Enables the feature where the SDI IN 1 video signal (as defined by the Input Video Source menu) is the primary source and the SDI BI-DIR source is defined as the Backup Video Source (by default). • If the primary source is lost, the card automatically switches to the backup source; the card stays on the backup source until the user manually switches the signal back to the primary source.
	OFF*	Disables this feature
Force Failover	Normal*	The card automatically switches input video sources when a loss of input signal is detected
	Forced	The user has manually switched between the input video sources by clicking this button
Output Video on Loss of Input	Matte	A solid (single) color pattern will replace all of the output picture (but not the HANC and VANC) during a loss of input video. The color is specified by the Matte Color menu.
	Test Pattern	A SMPTE bars test pattern will replace all of the output picture (but not the HANC and VANC) during a loss of input video
	Freeze	Sets the output to freeze the last valid frame of video if there is a loss of input
Video Output		
Output Video Source	Video In	The video output of the card is a copy of the SDI input signal. The Output Format menu is now read-only.
	Test Pattern	Specifies that a SMPTE bars test pattern will replace all of the output picture (but not the HANC and VANC)
	Matte	The video output of the card is a matte pattern as determined by the Matte Color menu value

Table 15 Config Tab

Item	Parameters	Description
Output Format	#	Specifies the video format for the output signal
	# (read-only)	The Output Video Source is set to Video In. The output format is automatically set to match the last detected video input signal.
Configure Outputs		
Clip at Black	Selected	Enables the card to clip to SMPTE black on all outputs
	Cleared	Super Black is passed
Clip at White	Selected	Enables the card to clip to SMPTE white on all outputs
	Cleared	Super White is passed
Enable Bouncing Box	Selected	An overlay in the shape of a box, filled with the specified custom color, moves across the screen in a pre-determined pattern
	Cleared	Disables this feature
Matte Color	#	Specifies the color the Matte Pattern will display. A matte pattern can be assigned to the Output Video on Loss of Input and/or to as the default Output Video signal. The default is White.
Frame Sync and Output Timing		
Frame Sync Status	Licensed (Green)	The AMX-8952-FS-LICENSE is installed.
	Unlicensed (Gray)	The AMX-8952-FS-LICENSE is not installed. Refer to "**Installing a License Key**".
	Off (Gray)	The Mode is set to Frame sync OFF
Mode	Frame sync ON*	Enables this feature. Refer to "**Frame Sync Configuration**" for details.
	Frame sync OFF	Disables this feature
Configure Output Delay		
Horizontal Delay (percent of line)	#	Adjusts the horizontal delay with respect to the reference. This slider is read-only if the Mode is set to Frame sync OFF.
Vertical Delay (lines)	#	Specifies the vertical delay with respect to the reference. This slider is read-only if the Mode is set to Frame sync OFF.
Frame Delay (frames)	#	Specifies the number of frames of delay with respect to the reference. The default is 1 frame. This slider is read-only if the Mode is set to Frame sync OFF.

Audio Tab

The Audio tab provides options for configuring the audio signals for the AMX-8952.

Embedded Tab

Table 16 summarizes the options displayed in the Embedded sub-tab. This tab displays for all AMX-8952 series cards.

Table 16 AMX-8952 # Interface — Audio > Embedded Tab

Item	Parameters	Description
Sample Rate Conversion	Selected	Applies the SRC on the audio channels in the video input before processed by the Frame Sync
	Cleared	SRC is not applied to any of the audio channels in the SDI input Select this option when using non-PCM audio data
Ch #		
Audio Source	Group # Ch #	Specifies the input for the specified channel that is inserted into the embedded pair (if present)
	#kHz Tone	Embeds the selected test tone
Mute	Selected	Mutes the input source for the specified channel that is inserted into the embedded pair (if present)
	Cleared	The input source for the specified channel is not muted
Gain (dB)	#	Adjusts the gain of the specified channel of audio. Select 0 when using non-PCM audio.
Gain Lock	Selected	Locks the Ch Gain slider for the specified channel pair
	Cleared	Unlocks the Ch Gain slider
Sum	Selected	Both channels will carry the average of the two input channels ((A+B)/2)
	Cleared	Disables this feature
Invert	Selected	Inverts the audio signal of the specified pair
	Cleared	• Audio signal of the specified pair is not inverted • Use for non-PCM audio data
Total Delay (ms) (read-only)	#	Reports the total delay applied to the specified channel
Delay Offset (ms)		Adjusts the delay of the specified channel
Delay Lock	Locks the Ch Delay slider for the specified channel pair	
Reset	Resets all Audio Output settings for the applicable audio pair to the factory default values	

AES Tab

Table 16 summarizes the options displayed in the AES sub-tab.

✶ This tab only displays when using an AMX-8952-A or AMX-8952-B.

Table 17 AMX-8952 # Interface — Audio > AES Tab

Item	Parameters	Description
AES # - Channel #		
Audio Source	AES# Ch #	Assigns the specified channel of the specified AES signal
	SDI Ch #	Assigns the specified channel from the SDI IN signal
	#Hz Tone	Assigns the specified test tone
Mute	Selected	Mutes the input source for the specified channel
	Cleared	The input source for the specified channel is not muted
Gain (dB)	#	• Adjusts the gain of the specified channel of audio • Select 0 when using non-PCM audio
Gain Lock	Selected	Locks the Ch Gain slider for the specified pair
	Cleared	Unlocks the Ch Gain slider
Sum	Selected	Both channels will carry the average of the two input channels ((A+B)/2)
	Cleared	Disables this feature
Invert	Selected	Inverts the audio signal of the specified AES pair
	Cleared	• Audio signal of the specified AES pair is not inverted • Use for non-PCM audio data
Total Delay (ms) (read-only)	#	Reports the total delay applied to the specified AES channel
Delay Offset (ms)	#	Adjusts the delay of the specified AES channel
Delay Lock	Locks the Ch Delay slider for the specified AES channel pair	
Reset	Resets all settings for the applicable AES pair to the factory defaults	

Analog Tab

Table 16 summarizes the options displayed in the Analog sub-tab.

✶ This tab only displays when using an AMX-8952-C.

Table 18 AMX-8952 # Interface — Audio > Analog Tab

Item	Parameters	Description
Analog # - Channel #		
Audio Source	Analog # Ch #	Assigns the specified channel of the specified analog signal
	SDI Ch #	Assigns the specified channel from the SDI IN signal
	#Hz Tone	Assigns the specified test tone
Mute	Selected	Mutes the input source for the specified channel
	Cleared	The input source for the specified channel is not muted
Gain (dB)	#	• Adjusts the gain of the specified channel of audio • Select 0 when using non-PCM audio
Gain Lock	Selected	Locks the Ch Gain slider for the specified pair
	Cleared	Unlocks the Ch Gain slider
Sum	Selected	Both channels will carry the average of the two input channels ((A+B)/2)
	Cleared	Disables this feature
Invert	Selected	Inverts the audio signal of the specified analog channel pair
	Cleared	• Audio signal of the specified pair is not inverted • Use for non-PCM audio data
Delay Offset (ms)	#	Adjusts the delay of the specified channel
Delay Lock	Locks the Ch Delay slider for the specified channel pair	
Reset	Resets all settings for the applicable pair to the factory defaults	

ANC Tab

Table 19 summarizes the **ANC** options available in DashBoard.

Table 19 ANC Tab

Item	Parameters	Description
ANC Frame Delay (read-only)	#	• The frame delay is always relative to the next output frame. • The ANC frame sync may operate with different input and output frame rates. • The output is at a fixed rate as defined by the Output Video mode.
		• When the output rate is lower than the input rate, then there is the potential for multiple inputs fields to be copied into the same output field. • When the output rate is higher than the input rate, then there will be some output fields with no ANC data.
Packet Name (read-only)	#	Indicates the ancillary data type
Action	Delete	Card deletes the packet from the output
	Pass	• The card receives and re-inserts the specified packet type into the specified line without modifying the packet contents • This option is only applicable to packets that the card is not currently able to process
	Process	Card receives the ANC packet, processes it, and re-inserts it
Insertion Line	Switch Line + #	Selects a line to insert the specified ANC packet on. Note that if more than one packet is to be inserted in the same line, the packet with the lowest insertion order number will be inserted first.
	Process	Card receives the Closed Captioning CC-708 packet, processes it, and inserts a new packet into the specific line
Insertion Order	#	Defines the hierarchy of the packets insertion. Note that the lower the number, the higher priority the packet is given.

GPI/Tally Tab

Table 20 summarizes the options displayed in the GPI/Tally tab.

Table 20 GPI/Tally Tab

Item	Parameters	Description
GPI/Tally #		

Table 20 GPI/Tally Tab

Item	Parameters	Description
Function	None*	The specified GPIO port is not configured and the port state has no effect. The Trigger/Tally Type setting is ignored.
	Tally Failover Active	The port will trigger a switch between the input video sources
	General Output	The port will trigger events on an external GPI I/O device from the card
	GPI Force Failover	The port will trigger a switch between the input video sources
	General Input	When the card receives a trigger on the selected GPI input, it runs the events that have been assigned to the GPI input.
Trigger/Tally Type	Falling*	If configured for Falling Edge, the selected function is executed when the GPI input signal transitions from High to Low
	Rising	If configured for Rising Edge, the selected function is executed when the GPI input signal transitions from Low to High
	High	If configured for Active High, the selected function is executed when the GPI input signal is driven High
	Low	If configured for Active Low, the selected function is executed when the GPI input signal is driven Low
Current State (read-only)	High	Reports the state of the specified GPIO port
	Low	
Output Pulse Width (frames)	#	Specifies the number of frames between the rising and falling edges of the output
Manual Override	Selected	The user will trigger a switch in states
	Cleared	The port will trigger a switch in states
Level	High	The output toggles from the base low level to the high level. The output signal remains at this level until reset.
	Low	The output level toggles from the base high level to the low level. The output signal remains at this level until reset.

Technical Specifications

This chapter provides technical information for AMX-8952.

✶ Specifications are subject to change without notice.

Supported Video Formats

Table 21 Technical Specifications — Supported Video Formats

Video Format
HD Formats
720p 50Hz
720p 59.94Hz
1080i 50Hz
1080i 59.94Hz
1080pSF 23.98Hz
1080pSF 24Hz
1080p 23.98Hz
1080p 24Hz
1080p 25Hz
1080p 29.97Hz
1080p 30Hz
1080p 50Hz
1080p 59.94Hz
1080p 60Hz[a]
UHD Formats[b]
2160p 23.98Hz
2160p 24Hz
2160p 25Hz
2160p 29.97Hz
2160p 30Hz
2160p 50Hz
2160p 59.94Hz

a. Supported on the input only.
b. Requires the AMX-8952-UHD-LICENSE.

SDI Inputs Specifications

Table 22 Technical Specifications — SDI Inputs

Item	Specifications
Number of Inputs	1 dedicated 1 bi-directional
Connector Type	HD-BNC
Standards Accommodated	1.485Gbps Component, SMPTE 292M
	2.97Gbps Component, SMPTE 424M
	5.94Gbps Component, SMPTE ST-2081
	11.88Gbps Component, SMPTE ST-2082
Impedance	75ohm
Return Loss	>15dB to 1.5GHz
	>10dB to 3GHz
	>7dB to 6GHz
	>4dB to 12GHz
Equalization (Belden 1694A cable)	>150m (492ft) @ 1.485Gbps
	>120m (394ft) @ 2.97Gbps
	@ 5.94Gbps
	>50m (190ft) @ 11.88Gbps

SDI Outputs Specifications

Table 23 Technical Specifications — SDI Outputs

Item	Specifications
Number of Outputs	1 dedicated 1 bi-directional
Connector Type	HD-BNC
Impedance	75ohm
Return Loss	>15dB to 1.5GHz
	>10dB to 3GHz
	>7dB to 6GHz
	>4dB to 12GHz
Signal Level	800mV ±10%
DC Offset	0V ±50mV
Rise and Fall Time (20-80%)	1.485Gbps: <270ps, <100ps difference
	2.97Gbps: <135ps, <50ps difference
	5.94Gbps:
	11.88Gbps: <45ps, <18ps difference

Table 23 Technical Specifications — SDI Outputs

Item	Specifications	
Jitter	1.485Gbps:	<1.0UI 10Hz-100kHz, <0.2UI above 100kHz
	2.97Gbps:	<1.0UI 10Hz-100kHz, <0.3UI above 100kHz
	5.94Gbps:	
	11.88Gbps:	<2.0UI 10Hz-100kHz, <0.3UI above 100kHz, band limit @1188MHz
Overshoot	<10% (11.88Gpbs: <15%)	

AES Specifications

AMX-8952-A

Table 24 AES Specifications — AMX-8952-A

Item	Specifications
Standards Accommodated	AES-3id-2001, AES3
Connector Type	HD-BNC
Inputs	
Impedance	75ohm
Minimum Input	50mV p-p
Maximum Input	2.5V p-p @ 48kHz 1.5V p-p @ 96kHz
Minimum Audio Delay	SRC enabled: 1.35mS SRC disabled: 0.37mS
Sampling Rate	48kHz compliant with AES-3id or any rate from 32kHz to 96kHz with SRC on
Equalization	up to 800m (2,400ft) @ 48kHz up to 500m (1,500ft) @ 96kHz
Output Amplitude	4Vp-p
Rise and Fall Times	30ns
Jitter	4.5mUI
Outputs	
Impedance	75ohm
Output Level	1V p-p
Sampling Rate	48kHz

AMX-8952-B

Table 25 AES Specifications — AMX-8952-B

Item	Specifications
Standards Accommodated	AES-3id-2001, AES3
Connector Type	3-pin WECO™
Inputs	
Impedance	110ohm
Minimum Input	100mV
Maximum Input	10Vp-p
Minimum Audio Delay	2.3ms (SRC enabled)
Sampling Rate	SRC enabled: up to 96KHz SRC disabled: 1.0ms
Equalization	>450m of Belden 1492 cable
Return Loss	>26dB 100KHz to 6MHz
Output Amplitude	4Vp-p
Rise and Fall Times	30ns
Jitter	4.5mUI
Outputs	
Impedance	110ohm
Minimum Audio Delay	2.3ms (SRC enabled)
Sampling Rate	up to 96KHz
Equalization	>450m of Belden 1492 cable
Return Loss	>26dB 100KHz to 6MHz
Output Amplitude	4Vp-p
Rise and Fall Times	30ns
Jitter	4.5mUI

Analog Specifications

AMX-8952-C

Table 26 Analog Specifications — AMX-8952-C

Item	Specifications
Connector Type	3-pin WECO™
Inputs	
Impedance	>12kohm
Maximum Input Level	+24dBu
Input Level Adjustment	±20dBu
Frequency Response	±0.10dB 20Hz to 20kHz @ Fs = 48kHz

Table 26 Analog Specifications — AMX-8952-C

Item	Specifications
Signal to Noise Ratio	-100dB -104dB 'A' weighted -101dB CCIR-2K
THD	< -90dB (0.003%) @ 1kHz
Amplitude Linearity	< 0.6dB @ -100dBFS
Crosstalk	-95dB
Outputs	
Maximum Output Level	+24dBu
Frequency Response	±0.10dB 20Hz to 20kHz @ Fs = 48kHz
Signal to Noise Ratio	-103dB -108dB 'A' weighted -105dB CCIR-2K
THD	< -90dB (0.003%) @ 1kHz
Amplitude Linearity	< 0.5dB @ -100dBFS
Crosstalk	<-98dB (20Hz to 20kHz)

GPIO

Table 27 Technical Specifications — GPIO

Item	Specifications
Absolute Maximum Voltage at Connector Pins	1.0V to +6.0V to prevent damage
GPI	
Input	• 4.7K ohm resistor pull-up to 5V for High • GND contact closure (or external logic) for Low • High In is >= 2.5V • Low In is <= 0.5V
Tally	
Output	• Pulled to 5V with 4k7 ohm resistor for High • Driven to ground or Low through 30ohms • Maximum sink current 50mA to drive an external relay • To drive a logic gate input, sink current needs to be below 10mA (0.3V at pin)

Environment

Table 28 Technical Specifications — Environment

Item	Specifications
Maximum Ambient Temperature	40°C (104°F)

Power

Table 29 Technical Specifications — Power

Item	Specifications	
Maximum Power Consumption	AMX-8952-A, AMX-8952-B	20W
	AMX-8952-C	25W

Software Licenses

This chapter provides third-party software license information for your AMX-8952. This product includes multiple software components which are individually licensed under one or more of the following licenses included in this chapter.

BSD

Copyright (c) 1991,1993, The Regents of the University of California. All rights reserved.

This code is derived from software contributed to Berkeley by Kenneth Almquist.

Redistribution and use in source and binary forms, with or without modification, are permitted provided that the following conditions are met:

1. Redistributions of source code must retain the above copyright notice, this list of conditions and the following disclaimer.

2. Redistributions in binary form must reproduce the above copyright notice, this list of conditions and the following disclaimer in the documentation and/or other materials provided with the distribution.

3. <BSD Advertising Clause omitted per the July 22, 1999 licensing change ftp://ftp.cs.berkeley.edu/pub/4bsd/README.Impt.License.Change> California, Berkeley and its contributors.

4. Neither the name of the University nor the names of its contributors may be used to endorse or promote products derived from this software without specific prior written permission.

THIS SOFTWARE IS PROVIDED BY THE REGENTS AND CONTRIBUTORS ``AS IS'' AND ANY EXPRESS OR IMPLIED WARRANTIES, INCLUDING, BUT NOT LIMITED TO, THE IMPLIED WARRANTIES OF MERCHANTABILITY AND FITNESS FOR A PARTICULAR PURPOSE ARE DISCLAIMED. IN NO EVENT SHALL THE REGENTS OR CONTRIBUTORS BE LIABLE FOR ANY DIRECT, INDIRECT, INCIDENTAL, SPECIAL, EXEMPLARY, OR CONSEQUENTIAL DAMAGES (INCLUDING, BUT NOT LIMITED TO, PROCUREMENT OF SUBSTITUTE GOODS OR SERVICES; LOSS OF USE, DATA, OR PROFITS; OR BUSINESS INTERRUPTION) HOWEVER CAUSED AND ON ANY THEORY OF LIABILITY, WHETHER IN CONTRACT, STRICT LIABILITY, OR TORT (INCLUDING NEGLIGENCE OR OTHERWISE) ARISING IN ANY WAY OUT OF THE USE OF THIS SOFTWARE, EVEN IF ADVISED OF THE POSSIBILITY OF SUCH DAMAGE.

Dual GPL

Portions of this software are copyright (C) 1996-2002 The FreeType Project (www.freetype.org). All rights reserved.

This project is also covered under the GPL v2.

GPL

GNU GENERAL PUBLIC LICENSE
Version 3, 29 June 2007
Copyright (C) 2007 Free Software Foundation, Inc. <http://fsf.org/>
Preamble

The GNU General Public License is a free, copyleft license for software and other kinds of works.

The licenses for most software and other practical works are designed to take away your freedom to share and change the works. By contrast, the GNU General Public License is intended to guarantee your freedom to share and change all versions of a program--to make sure it remains free software for all its users. We, the Free Software Foundation, use the GNU General Public License for most of our software; it applies also to any other work released this way by its authors. You can apply it to your programs, too.

When we speak of free software, we are referring to freedom, not price. Our General Public Licenses are designed to make sure that you have the freedom to distribute copies of free software (and charge for them if you wish), that you receive source code or can get it if you want it, that you can change the software or use pieces of it in new free programs, and that you know you can do these things.

To protect your rights, we need to prevent others from denying you these rights or asking you to surrender the rights. Therefore, you have certain responsibilities if you distribute copies of the software, or if you modify it: responsibilities to respect the freedom of others.

For example, if you distribute copies of such a program, whether gratis or for a fee, you must pass on to the recipients the same freedoms that you received. You must make sure that they, too, receive or can get the source code. And you must show them these terms so they know their rights.

Developers that use the GNU GPL protect your rights with two steps: (1) assert copyright on the software, and (2) offer you this License giving you legal permission to copy, distribute and/or modify it.

For the developers' and authors' protection, the GPL clearly explains that there is no warranty for this free software. For both users' and authors' sake, the GPL requires that modified versions be marked as changed, so that their problems will not be attributed erroneously to authors of previous versions.

Some devices are designed to deny users access to install or run modified versions of the software inside them, although the manufacturer can do so. This is fundamentally incompatible with the aim of protecting users' freedom to change the software. The systematic pattern of such abuse occurs in the area of products for individuals to use, which is precisely where it is most unacceptable. Therefore, we have designed this version of the GPL to prohibit the practice for those products. If

such problems arise substantially in other domains, we stand ready to extend this provision to those domains in future versions of the GPL, as needed to protect the freedom of users.

Finally, every program is threatened constantly by software patents. States should not allow patents to restrict development and use of software on general-purpose computers, but in those that do, we wish to avoid the special danger that patents applied to a free program could make it effectively proprietary. To prevent this, the GPL assures that patents cannot be used to render the program non-free.

The precise terms and conditions for copying, distribution and modification follow.

TERMS AND CONDITIONS

0. Definitions.

"This License" refers to version 3 of the GNU General Public License.

"Copyright" also means copyright-like laws that apply to other kinds of works, such as semiconductor masks.

"The Program" refers to any copyrightable work licensed under this License. Each licensee is addressed as "you". "Licensees" and "recipients" may be individuals or organizations.

To "modify" a work means to copy from or adapt all or part of the work in a fashion requiring copyright permission, other than the making of an exact copy. The resulting work is called a "modified version" of the earlier work or a work "based on" the earlier work.

A "covered work" means either the unmodified Program or a work based on the Program.

To "propagate" a work means to do anything with it that, without permission, would make you directly or secondarily liable for infringement under applicable copyright law, except executing it on a computer or modifying a private copy. Propagation includes copying, distribution (with or without modification), making available to the public, and in some countries other activities as well.

To "convey" a work means any kind of propagation that enables other parties to make or receive copies. Mere interaction with a user through a computer network, with no transfer of a copy, is not conveying.

An interactive user interface displays "Appropriate Legal Notices" to the extent that it includes a convenient and prominently visible feature that (1) displays an appropriate copyright notice, and (2) tells the user that there is no warranty for the work (except to the extent that warranties are provided), that licensees may convey the work under this License, and how to view a copy of this License. If the interface presents a list of user commands or options, such as a menu, a prominent item in the list meets this criterion.

1. Source Code.

The "source code" for a work means the preferred form of the work for making modifications to it. "Object code" means any non-source form of a work.

A "Standard Interface" means an interface that either is an official standard defined by a recognized standards body, or, in the case of interfaces specified for a particular programming language, one that is widely used among developers working in that language.

The "System Libraries" of an executable work include anything, other than the work as a whole, that (a) is included in the normal form of packaging a Major Component, but which is not part of that Major Component, and (b) serves only to enable use of the work with that Major Component, or to implement a Standard Interface for which an implementation is available to the public in source code form. A "Major Component", in this context, means a major essential component (kernel, window system, and so on) of the specific operating system (if any) on which the executable work runs, or a compiler used to produce the work, or an object code interpreter used to run it.

The "Corresponding Source" for a work in object code form means all the source code needed to generate, install, and (for an executable work) run the object code and to modify the work, including scripts to control those activities. However, it does not include the work's System Libraries, or general-purpose tools or generally available free programs which are used unmodified in performing those activities but which are not part of the work. For example, Corresponding Source includes interface definition files associated with source files for the work, and the source code for shared libraries and dynamically linked subprograms that the work is specifically designed to require, such as by intimate data communication or control flow between those subprograms and other parts of the work.

The Corresponding Source need not include anything that users can regenerate automatically from other parts of the Corresponding Source.

The Corresponding Source for a work in source code form is that same work.

2. Basic Permissions.

All rights granted under this License are granted for the term of copyright on the Program, and are irrevocable provided the stated conditions are met. This License explicitly affirms your unlimited permission to run the unmodified Program. The output from running a covered work is covered by this License only if the output, given its content, constitutes a covered work. This License acknowledges your rights of fair use or other equivalent, as provided by copyright law.

You may make, run and propagate covered works that you do not convey, without conditions so long as your license otherwise remains in force. You may convey covered works to others for the sole purpose of having them make modifications exclusively for you, or provide you with facilities for running those works, provided that you comply with the terms of this License in conveying all material for which you do not control copyright. Those thus making or running the covered works for you must do so exclusively on your behalf, under your direction and control, on terms that prohibit them from making any copies of your copyrighted material outside their relationship with you.

Conveying under any other circumstances is permitted solely under the conditions stated below. Sublicensing is not allowed; section 10 makes it unnecessary.

3. Protecting Users' Legal Rights From Anti-Circumvention Law.

No covered work shall be deemed part of an effective technological measure under any applicable law fulfilling obligations under article 11 of the WIPO copyright treaty adopted on 20 December 1996, or similar laws prohibiting or restricting circumvention of such measures.

When you convey a covered work, you waive any legal power to forbid circumvention of technological measures to the extent such circumvention is effected by exercising rights under this License with respect to the covered work, and you disclaim any intention to limit operation or modification of the work as a means of enforcing, against the work's users, your or third parties' legal rights to forbid circumvention of technological measures.

4. Conveying Verbatim Copies.

You may convey verbatim copies of the Program's source code as you receive it, in any medium, provided that you conspicuously and appropriately publish on each copy an appropriate copyright notice; keep intact all notices stating that this License and any non-permissive terms added in accord with section 7 apply to the code; keep intact all notices of the absence of any warranty; and give all recipients a copy of this License along with the Program.

You may charge any price or no price for each copy that you convey, and you may offer support or warranty protection for a fee.

5. Conveying Modified Source Versions.

You may convey a work based on the Program, or the modifications to produce it from the Program, in the form of source code under the terms of section 4, provided that you also meet all of these conditions:

a. The work must carry prominent notices stating that you modified it, and giving a relevant date.

b. The work must carry prominent notices stating that it is released under this License and any conditions added under section 7. This requirement modifies the requirement in section 4 to "keep intact all notices".

c. You must license the entire work, as a whole, under this License to anyone who comes into possession of a copy. This License will therefore apply, along with any applicable section 7 additional terms, to the whole of the work, and all its parts, regardless of how they are packaged. This License gives no permission to license the work in any other way, but it does not invalidate such permission if you have separately received it.

d. If the work has interactive user interfaces, each must display Appropriate Legal Notices; however, if the Program has interactive interfaces that do not display Appropriate Legal Notices, your work need not make them do so.

A compilation of a covered work with other separate and independent works, which are not by their nature extensions of the covered work, and which are not combined with it such as to form a larger program, in or on a volume of a storage or distribution medium, is called an "aggregate" if the compilation and its resulting copyright are not used to limit the access or legal rights of the compilation's users beyond what the individual works permit. Inclusion of a covered work in an aggregate does not cause this License to apply to the other parts of the aggregate.

6. Conveying Non-Source Forms.

You may convey a covered work in object code form under the terms of sections 4 and 5, provided that you also convey the machine-readable Corresponding Source under the terms of this License, in one of these ways:

a. Convey the object code in, or embodied in, a physical product (including a physical distribution medium), accompanied by the Corresponding Source fixed on a durable physical medium customarily used for software interchange.

b. Convey the object code in, or embodied in, a physical product (including a physical distribution medium), accompanied by a written offer, valid for at least three years and valid for as long as you offer spare parts or customer support for that product model, to give anyone who possesses the object code either (1) a copy of the Corresponding Source for all the software in the product that is covered by this License, on a durable physical medium customarily used for software interchange, for a price no more than your reasonable cost of physically performing this conveying of source, or (2) access to copy the Corresponding Source from a network server at no charge.

c. c) Convey individual copies of the object code with a copy of the written offer to provide the Corresponding Source. This alternative is allowed only occasionally and noncommercially, and only if you received the object code with such an offer, in accord with subsection 6b.

d. d) Convey the object code by offering access from a designated place (gratis or for a charge), and offer equivalent access to the Corresponding Source in the same way through the same place at no further charge. You need not require recipients to copy the Corresponding Source along with the object code. If the place to copy the object code is a network server, the Corresponding Source may be on a different server (operated by you or a third party) that supports equivalent copying facilities, provided you maintain clear directions next to the object code saying where to find the Corresponding Source. Regardless of what server hosts the Corresponding Source, you remain obligated to ensure that it is available for as long as needed to satisfy these requirements.

e. e) Convey the object code using peer-to-peer transmission, provided you inform other peers where the object code and Corresponding Source of the work are being offered to the general public at no charge under subsection 6d.

A separable portion of the object code, whose source code is excluded from the Corresponding Source as a System Library, need not be included in conveying the object code work.

A "User Product" is either (1) a "consumer product", which means any tangible personal property which is normally used for personal, family, or household purposes, or (2) anything designed or sold for incorporation into a dwelling. In determining whether a product is a consumer product, doubtful cases shall be resolved in favor of coverage. For a particular product received by a particular user, "normally used" refers to a typical or common use of that class of product, regardless of the status of the particular user or of the way in which the particular user actually uses, or expects or is expected to use, the product. A product is a consumer product regardless of whether the product has substantial commercial, industrial or non-consumer uses, unless such uses represent the only significant mode of use of the product.

"Installation Information" for a User Product means any methods, procedures, authorization keys, or other information required to install and execute modified versions of a covered work in that User Product from a modified version of its Corresponding Source. The information must suffice to ensure that the continued functioning of the modified object code is in no case prevented or interfered with solely because modification has been made.

If you convey an object code work under this section in, or with, or specifically for use in, a User Product, and the conveying occurs as part of a transaction in which the right of possession and use of the User Product is transferred to the recipient in perpetuity or for a fixed term (regardless of how the transaction is characterized), the Corresponding Source conveyed under this section must be accompanied by the Installation Information. But this requirement does not apply if neither you nor any third party retains the ability to install modified object code on the User Product (for example, the work has been installed in ROM).

The requirement to provide Installation Information does not include a requirement to continue to provide support service, warranty, or updates for a work that has been modified or installed by the recipient, or for the User Product in which it has been modified or installed. Access to a network may be denied when the modification itself materially and adversely affects the operation of the network or violates the rules and protocols for communication across the network.

Corresponding Source conveyed, and Installation Information provided, in accord with this section must be in a format that is publicly documented (and with an implementation available to the public in source code form), and must require no special password or key for unpacking, reading or copying.

7. Additional Terms.

"Additional permissions" are terms that supplement the terms of this License by making exceptions from one or more of its conditions. Additional permissions that are applicable to the entire Program shall be treated as though they were included in this License, to the extent that they are valid under applicable law. If additional permissions apply only to part of the Program, that part may be used separately under those permissions, but the entire Program remains governed by this License without regard to the additional permissions.

When you convey a copy of a covered work, you may at your option remove any additional permissions from that copy, or from any part of it. (Additional permissions may be written to require their own removal in certain cases when you modify the work.) You may place additional permissions on material, added by you to a covered work, for which you have or can give appropriate copyright permission.

Notwithstanding any other provision of this License, for material you add to a covered work, you may (if authorized by the copyright holders of that material) supplement the terms of this License with terms:

a. Disclaiming warranty or limiting liability differently from the terms of sections 15 and 16 of this License; or

b. Requiring preservation of specified reasonable legal notices or author attributions in that material or in the Appropriate Legal Notices displayed by works containing it; or

c. Prohibiting misrepresentation of the origin of that material, or requiring that modified versions of such material be marked in reasonable ways as different from the original version; or

d. Limiting the use for publicity purposes of names of licensors or authors of the material; or

e. Declining to grant rights under trademark law for use of some trade names, trademarks, or service marks; or

f. Requiring indemnification of licensors and authors of that material by anyone who conveys the material (or modified versions of it) with contractual assumptions of liability to the recipient, for any liability that these contractual assumptions directly impose on those licensors and authors.

All other non-permissive additional terms are considered "further restrictions" within the meaning of section 10. If the Program as you received it, or any part of it, contains a notice stating that it is governed by this License along with a term that is a further restriction, you may remove that term. If a license document contains a further restriction but permits relicensing or conveying under this License, you may add to a covered work material governed by the terms of that license document, provided that the further restriction does not survive such relicensing or conveying.

If you add terms to a covered work in accord with this section, you must place, in the relevant source files, a statement of the additional terms that apply to those files, or a notice indicating where to find the applicable terms.

Additional terms, permissive or non-permissive, may be stated in the form of a separately written license, or stated as exceptions; the above requirements apply either way.

8. Termination.

You may not propagate or modify a covered work except as expressly provided under this License. Any attempt otherwise to propagate or modify it is void, and will automatically terminate your rights under this License (including any patent licenses granted under the third paragraph of section 11).

However, if you cease all violation of this License, then your license from a particular copyright holder is reinstated (a) provisionally, unless and until the copyright holder explicitly and finally terminates your license, and (b) permanently, if the copyright holder fails to notify you of the violation by some reasonable means prior to 60 days after the cessation.

Moreover, your license from a particular copyright holder is reinstated permanently if the copyright holder notifies you of the violation by some reasonable means, this is the first time you have received notice of violation of this License (for any work) from that copyright holder, and you cure the violation prior to 30 days after your receipt of the notice.

Termination of your rights under this section does not terminate the licenses of parties who have received copies or rights from you under this License. If your rights have been terminated and not permanently reinstated, you do not qualify to receive new licenses for the same material under section 10.

9. Acceptance Not Required for Having Copies.

You are not required to accept this License in order to receive or run a copy of the Program. Ancillary propagation of a covered work occurring solely as a consequence of using peer-to-peer transmission to receive a copy likewise does not require acceptance. However, nothing other than this License grants you permission to propagate or modify any covered work. These actions infringe copyright if you do not accept this License. Therefore, by modifying or propagating a covered work, you indicate your acceptance of this License to do so.

10. Automatic Licensing of Downstream Recipients.

Each time you convey a covered work, the recipient automatically receives a license from the original licensors, to run, modify and propagate that work, subject to this License. You are not responsible for enforcing compliance by third parties with this License.

An "entity transaction" is a transaction transferring control of an organization, or substantially all assets of one, or subdividing an organization, or merging organizations. If propagation of a covered work results from an entity transaction, each party to that transaction who receives a copy of the work also receives whatever licenses to the work the party's predecessor in interest had or could give under the previous paragraph, plus a right to possession of the Corresponding Source of the work from the predecessor in interest, if the predecessor has it or can get it with reasonable efforts.

You may not impose any further restrictions on the exercise of the rights granted or affirmed under this License. For example, you may not impose a license fee, royalty, or other charge for exercise of rights granted under this License, and you may not initiate litigation (including a cross-claim or counterclaim in a lawsuit) alleging that any patent claim is infringed by making, using, selling, offering for sale, or importing the Program or any portion of it.

11. Patents.

A "contributor" is a copyright holder who authorizes use under this License of the Program or a work on which the Program is based. The work thus licensed is called the contributor's "contributor version".

A contributor's "essential patent claims" are all patent claims owned or controlled by the contributor, whether already acquired or hereafter acquired, that would be infringed by some manner, permitted by this License, of making, using, or selling its contributor version, but do not include claims that would be infringed only as a consequence of further modification of the contributor version. For purposes of this definition, "control" includes the right to grant patent sublicenses in a manner consistent with the requirements of this License.

Each contributor grants you a non-exclusive, worldwide, royalty-free patent license under the contributor's essential patent claims, to make, use, sell, offer for sale, import and otherwise run, modify and propagate the contents of its contributor version.

In the following three paragraphs, a "patent license" is any express agreement or commitment, however denominated, not to enforce a patent (such as an express permission to practice a patent or covenant not to sue for patent infringement). To "grant" such a patent license to a party means to make such an agreement or commitment not to enforce a patent against the party.

If you convey a covered work, knowingly relying on a patent license, and the Corresponding Source of the work is not available for anyone to copy, free of charge and under the terms of this License, through a publicly available network server or other readily accessible means, then you must either (1) cause the Corresponding Source to be so available, or (2) arrange to deprive yourself of the benefit of the patent license for this particular work, or (3) arrange, in a manner consistent with the requirements of this License, to extend the patent license to downstream recipients. "Knowingly relying" means you have actual knowledge that, but for the patent license, your conveying the covered work in a country, or your recipient's use of the covered work in a country, would infringe one or more identifiable patents in that country that you have reason to believe are valid.

If, pursuant to or in connection with a single transaction or arrangement, you convey, or propagate by procuring conveyance of, a covered work, and grant a patent license to some of the parties receiving the covered work authorizing them to use, propagate, modify or convey a specific copy of the covered work, then the patent license you grant is automatically extended to all recipients of the covered work and works based on it.

A patent license is "discriminatory" if it does not include within the scope of its coverage, prohibits the exercise of, or is conditioned on the non-exercise of one or more of the rights that are specifically granted under this License. You may not convey a covered work if you are a party to an arrangement with a third party that is in the business of distributing software, under which you make payment to the third party based on the extent of your activity of conveying the work, and under which the third party grants, to any of the parties who would receive the covered work from you, a discriminatory patent license (a) in connection with copies of the covered

work conveyed by you (or copies made from those copies), or (b) primarily for and in connection with specific products or compilations that contain the covered work, unless you entered into that arrangement, or that patent license was granted, prior to 28 March 2007.

Nothing in this License shall be construed as excluding or limiting any implied license or other defenses to infringement that may otherwise be available to you under applicable patent law.

12. No Surrender of Others' Freedom.

If conditions are imposed on you (whether by court order, agreement or otherwise) that contradict the conditions of this License, they do not excuse you from the conditions of this License. If you cannot convey a covered work so as to satisfy simultaneously your obligations under this License and any other pertinent obligations, then as a consequence you may not convey it at all. For example, if you agree to terms that obligate you to collect a royalty for further conveying from those to whom you convey the Program, the only way you could satisfy both those terms and this License would be to refrain entirely from conveying the Program.

13. Use with the GNU Affero General Public License.

Notwithstanding any other provision of this License, you have permission to link or combine any covered work with a work licensed under version 3 of the GNU Affero General Public License into a single combined work, and to convey the resulting work. The terms of this License will continue to apply to the part which is the covered work, but the special requirements of the GNU Affero General Public License, section 13, concerning interaction through a network will apply to the combination as such.

14. Revised Versions of this License.

The Free Software Foundation may publish revised and/or new versions of the GNU General Public License from time to time. Such new versions will be similar in spirit to the present version, but may differ in detail to address new problems or concerns.

Each version is given a distinguishing version number. If the Program specifies that a certain numbered version of the GNU General Public License "or any later version" applies to it, you have the option of following the terms and conditions either of that numbered version or of any later version published by the Free Software Foundation. If the Program does not specify a version number of the GNU General Public License, you may choose any version ever published by the Free Software Foundation.

If the Program specifies that a proxy can decide which future versions of the GNU General Public License can be used, that proxy's public statement of acceptance of a version permanently authorizes you to choose that version for the Program.

Later license versions may give you additional or different permissions. However, no additional obligations are imposed on any author or copyright holder as a result of your choosing to follow a later version.

15. Disclaimer of Warranty.

THERE IS NO WARRANTY FOR THE PROGRAM, TO THE EXTENT PERMITTED BY APPLICABLE LAW. EXCEPT WHEN OTHERWISE STATED IN WRITING THE COPYRIGHT HOLDERS AND/OR OTHER PARTIES PROVIDE THE PROGRAM "AS IS" WITHOUT WARRANTY OF ANY KIND, EITHER EXPRESSED OR IMPLIED, INCLUDING, BUT NOT LIMITED TO, THE IMPLIED WARRANTIES OF MERCHANTABILITY AND FITNESS FOR A PARTICULAR PURPOSE. THE ENTIRE RISK AS TO THE QUALITY AND PERFORMANCE OF THE PROGRAM IS WITH YOU. SHOULD THE PROGRAM PROVE DEFECTIVE, YOU ASSUME THE COST OF ALL NECESSARY SERVICING, REPAIR OR CORRECTION.

16. Limitation of Liability.

IN NO EVENT UNLESS REQUIRED BY APPLICABLE LAW OR AGREED TO IN WRITING WILL ANY COPYRIGHT HOLDER, OR ANY OTHER PARTY WHO MODIFIES AND/OR CONVEYS THE PROGRAM AS PERMITTED ABOVE, BE LIABLE TO YOU FOR DAMAGES, INCLUDING ANY GENERAL, SPECIAL, INCIDENTAL OR CONSEQUENTIAL DAMAGES ARISING OUT OF THE USE OR INABILITY TO USE THE PROGRAM (INCLUDING BUT NOT LIMITED TO LOSS OF DATA OR DATA BEING RENDERED INACCURATE OR LOSSES SUSTAINED BY YOU OR THIRD PARTIES OR A FAILURE OF THE PROGRAM TO OPERATE WITH ANY OTHER PROGRAMS), EVEN IF SUCH HOLDER OR OTHER PARTY HAS BEEN ADVISED OF THE POSSIBILITY OF SUCH DAMAGES.

17. Interpretation of Sections 15 and 16.

If the disclaimer of warranty and limitation of liability provided above cannot be given local legal effect according to their terms, reviewing courts shall apply local law that most closely approximates an absolute waiver of all civil liability in connection with the Program, unless a warranty or assumption of liability accompanies a copy of the Program in return for a fee.

LGPL

GNU LESSER GENERAL PUBLIC LICENSE
Version 3, 29 June 2007
Copyright (C) 2007 Free Software Foundation, Inc. <http://fsf.org/>

Everyone is permitted to copy and distribute verbatim copies of this license document, but changing it is not allowed.

This version of the GNU Lesser General Public License incorporates the terms and conditions of version 3 of the GNU General Public License, supplemented by the additional permissions listed below.

0. Additional Definitions.

As used herein, "this License" refers to version 3 of the GNU Lesser General Public License, and the "GNU GPL" refers to version 3 of the GNU General Public License.

"The Library" refers to a covered work governed by this License, other than an Application or a Combined Work as defined below.

An "Application" is any work that makes use of an interface provided by the Library, but which is not otherwise based on the Library. Defining a subclass of a class defined by the Library is deemed a mode of using an interface provided by the Library.

A "Combined Work" is a work produced by combining or linking an Application with the Library. The particular version of the Library with which the Combined

Work was made is also called the "Linked Version".

The "Minimal Corresponding Source" for a Combined Work means the Corresponding Source for the Combined Work, excluding any source code for portions of the

Combined Work that, considered in isolation, are based on the Application, and not on the Linked Version.

The "Corresponding Application Code" for a Combined Work means the object code and/or source code for the Application, including any data and utility programs needed for reproducing the Combined Work from the Application, but excluding the System Libraries of the Combined Work.

1. Exception to Section 3 of the GNU GPL.

You may convey a covered work under sections 3 and 4 of this License without being bound by section 3 of the GNU GPL.

2. Conveying Modified Versions.

If you modify a copy of the Library, and, in your modifications, a facility refers to a function or data to be supplied by an Application that uses the facility (other than as an argument passed when the facility is invoked), then you may convey a copy of the modified version:

a. under this License, provided that you make a good faith effort to ensure that, in the event an Application does not supply the function or data, the facility still operates, and performs whatever part of its purpose remains meaningful, or

b. under the GNU GPL, with none of the additional permissions of this License applicable to that copy.

3. Object Code Incorporating Material from Library Header Files.

The object code form of an Application may incorporate material from a header file that is part of the Library. You may convey such object code under terms of your choice, provided that, if the incorporated material is not limited to numerical parameters, data structure layouts and accessors, or small macros, inline functions and templates (ten or fewer lines in length), you do both of the following:

a. Give prominent notice with each copy of the object code that the Library is used in it and that the Library and its use are covered by this License.

b. Accompany the object code with a copy of the GNU GPL and this license document.

4. Combined Works.

You may convey a Combined Work under terms of your choice that, taken together, effectively do not restrict modification of the portions of the Library contained in the Combined Work and reverse engineering for debugging such modifications, if you also do each of the following:

a. Give prominent notice with each copy of the Combined Work that the Library is used in it and that the Library and its use are covered by this License.

b. Accompany the Combined Work with a copy of the GNU GPL and this license document.

c. For a Combined Work that displays copyright notices during execution, include the copyright notice for the Library among these notices, as well as a reference directing the user to the copies of the GNU GPL and this license document.

d. Do one of the following:

   1) Convey the Minimal Corresponding Source under the terms of this License, and the Corresponding Application Code in a form suitable for, and under terms that permit, the user to recombine or relink the Application with a modified version of the Linked Version to produce a modified Combined Work, in the manner specified by section 6 of the GNU GPL for conveying Corresponding Source.

   2) Use a suitable shared library mechanism for linking with the Library. A suitable mechanism is one that (a) uses at run time a copy of the Library already present on the user's computer system, and (b) will operate properly with a modified version of the Library that is interface-compatible with the Linked Version.

e. Provide Installation Information, but only if you would otherwise be required to provide such information under section 6 of the GNU GPL, and only to the extent that such information is necessary to install and execute a modified version of the Combined Work produced by recombining or relinking the Application with a modified version of the Linked Version. (If you use option 4d0, the Installation Information must accompany the Minimal Corresponding Source and Corresponding Application Code. If you use option 4d1, you must provide the Installation Information in the manner specified by section 6 of the GNU GPL for conveying Corresponding Source.)

5. Combined Libraries.

You may place library facilities that are a work based on the Library side by side in a single library together with other library facilities that are not Applications and are not covered by this License, and convey such a combined library under terms of your choice, if you do both of the following:

a. Accompany the combined library with a copy of the same work based on the Library, uncombined with any other library facilities, conveyed under the terms of this License.

b. Give prominent notice with the combined library that part of it is a work based on the Library, and explaining where to find the accompanying uncombined form of the same work.

6. Revised Versions of the GNU Lesser General Public License.

The Free Software Foundation may publish revised and/or new versions of the GNU Lesser General Public License from time to time. Such new versions will be similar in spirit to the present version, but may differ in detail to address new problems or concerns.

Each version is given a distinguishing version number. If the Library as you received it specifies that a certain numbered version of the GNU Lesser General Public License "or any later version" applies to it, you have the option of following the terms and conditions either of that published version or of any later version published by the Free Software Foundation. If the Library as you received it does not specify a version number of the GNU Lesser General Public License, you may choose any version of the GNU Lesser General Public License ever published by the Free Software Foundation.

If the Library as you received it specifies that a proxy can decide whether future versions of the GNU Lesser General Public License shall apply, that proxy's public statement of acceptance of any version is permanent authorization for you to choose that version for the Library.

MIT

Copyright 1987, 1988 by MIT Student Information Processing Board.

Permission to use, copy, modify, and distribute this software and its documentation for any purpose is hereby granted, provided that the names of M.I.T. and the M.I.T. S.I.P.B. not be used in advertising or publicity pertaining to distribution of the software without specific, written prior permission. M.I.T. and the M.I.T. S.I.P.B. make no representations about the suitability of this software for any purpose. It is provided "as is" without express or implied warranty.

zlib

Copyright (C) 1995-1998 Jean-loup Gailly and Mark Adler

This software is provided 'as-is', without any express or implied warranty. In no event will the authors be held liable for any damages arising from the use of this software.

Permission is granted to anyone to use this software for any purpose, including commercial applications, and to alter it and redistribute it freely, subject to the following restrictions:

1. The origin of this software must not be misrepresented; you must not claim that you wrote the original software. If you use this software in a product, an acknowledgment in the product documentation would be appreciated but is not required.
2. Altered source versions must be plainly marked as such, and must not be misrepresented as being the original software.
3. This notice may not be removed or altered from any source distribution.Jean-loup Gailly Mark Adler jloup@gzip.org madler@alumni.caltech.edu

The data format used by the zlib library is described by RFCs (Request for Comments) 1950 to 1952 in the files ftp://ds.internic.net/rfc/rfc1950.txt (zlib format), rfc1951.txt (deflate format) and rfc1952.txt (gzip format).

Service Information

This chapter provides information on the warranty and repair policy for your AMX-8952.

Troubleshooting Checklist

Routine maintenance to this openGear product is not required. In the event of problems with your AMX-8952, the following basic troubleshooting checklist may help identify the source of the problem. If the frame still does not appear to be working properly after checking all possible causes, please contact your openGear products distributor, or the Technical Support department at the numbers listed in "**Contacting Technical Support**".

1. **Visual Review** — Performing a quick visual check may reveal many problems, such as connectors not properly seated or loose cables. Check the card, the frame, and any associated peripheral equipment for signs of trouble.
2. **Power Check —** Check the power indicator LED on the distribution frame front panel for the presence of power. If the power LED is not illuminated, verify that the power cable is connected to a power source and that power is available at the power main. Confirm that the power supplies are fully seated in their slots. If the power LED is still not illuminated, replace the power supply with one that is verified to work.
3. **Input Signal Status** — Verify that source equipment is operating correctly and that a valid signal is being supplied.
4. **Output Signal Path** — Verify that destination equipment is operating correctly and receiving a valid signal.
5. **Unit Exchange** — Exchanging a suspect unit with a unit that is known to be working correctly is an efficient method for localizing problems to individual units.

Bootload Button

In the unlikely event of a complete card failure, you may be instructed by a Ross Technical Support specialist to perform a complete software reload on the AMX-8952.

To reload the software on a AMX-8952

1. Eject the card from the frame.
2. Press and hold the **Bootload** button, while re-inserting the card into the frame.
3. Release the button.
   - The **OK/ERROR** LED flashes green while the card is waiting for a new software load.
   - If a new software load is not sent to the card within 60 seconds, the card will attempt to re-start with its last operational software load.
   - Software loads can be sent to the AMX-8952 via the connection on the rear of the frame.

Warranty and Repair Policy

The AMX-8952 is warranted to be free of any defect with respect to performance, quality, reliability, and workmanship for a period of FIVE (5) years from the date of shipment from our factory. In the event that your AMX-8952 proves to be defective in any way during this warranty period, Ross Video Limited reserves the right to repair or replace this piece of equipment with a unit of equal or superior performance characteristics.

Should you find that this AMX-8952 has failed after your warranty period has expired, we will repair your defective product should suitable replacement components be available. You, the owner, will

bear any labor and/or part costs incurred in the repair or refurbishment of said equipment beyond the FIVE (5) year warranty period.

In no event shall Ross Video Limited be liable for direct, indirect, special, incidental, or consequential damages (including loss of profits) incurred by the use of this product. Implied warranties are expressly limited to the duration of this warranty.

This AMX-8952 User Manual provides all pertinent information for the safe installation and operation of your openGear Product. Ross Video policy dictates that all repairs to the AMX-8952 are to be conducted only by an authorized Ross Video Limited factory representative. Therefore, any unauthorized attempt to repair this product, by anyone other than an authorized Ross Video Limited factory representative, will automatically void the warranty. Please contact Ross Video Technical Support for more information.

In Case of Problems

Should any problem arise with your AMX-8952, please contact the Ross Video Technical Support Department. (Contact information is supplied at the end of this publication.)

A Return Material Authorization number (RMA) will be issued to you, as well as specific shipping instructions, should you wish our factory to repair your AMX-8952. If required, a temporary replacement frame will be made available at a nominal charge. Any shipping costs incurred will be the responsibility of you, the customer. All products shipped to you from Ross Video Limited will be shipped collect.

The Ross Video Technical Support Department will continue to provide advice on any product manufactured by Ross Video Limited, beyond the warranty period without charge, for the life of the equipment.

Glossary

The following terms are used throughout this guide:

Active image — the portion of the video picture area (production aperture) that is being utilized for output content. Active image excludes letterbox bars and pillar-box bars.

Card — refers to all AMX-8952 models unless otherwise noted.

DashBoard — the DashBoard Control System.

AMX-8952 series — refers to AMX-8952-A, AMX-8952-B, and AMX-8952-C unless otherwise noted.

DTVCC captions — CEA-708 captions.

Frame — the openGear frame that houses the AMX-8952 unless otherwise noted.

MIB — management information base.

Network Controller Card — the MFC-OG3-N and any available options unless otherwise noted.

NTSC captions — the CEA-608-D: Line 21 Data Services captions.

openGear Frame — refers to the OG3-FR series and OGX-FR series frames unless otherwise noted.

PAL — PAL-B and PAL-G unless otherwise noted.

Production aperture — the image lattice that represents the maximum possible image extent in a given standard (e.g. the full size of all active pixels and active lines). For example, the 1080i production aperture would be 1920x1080.

System— the mix of interconnected production and terminal equipment in your environment.

UDP — User Datagram Protocol.

User — the person who uses the AMX-8952.